HARKNESS HALL LIMITED

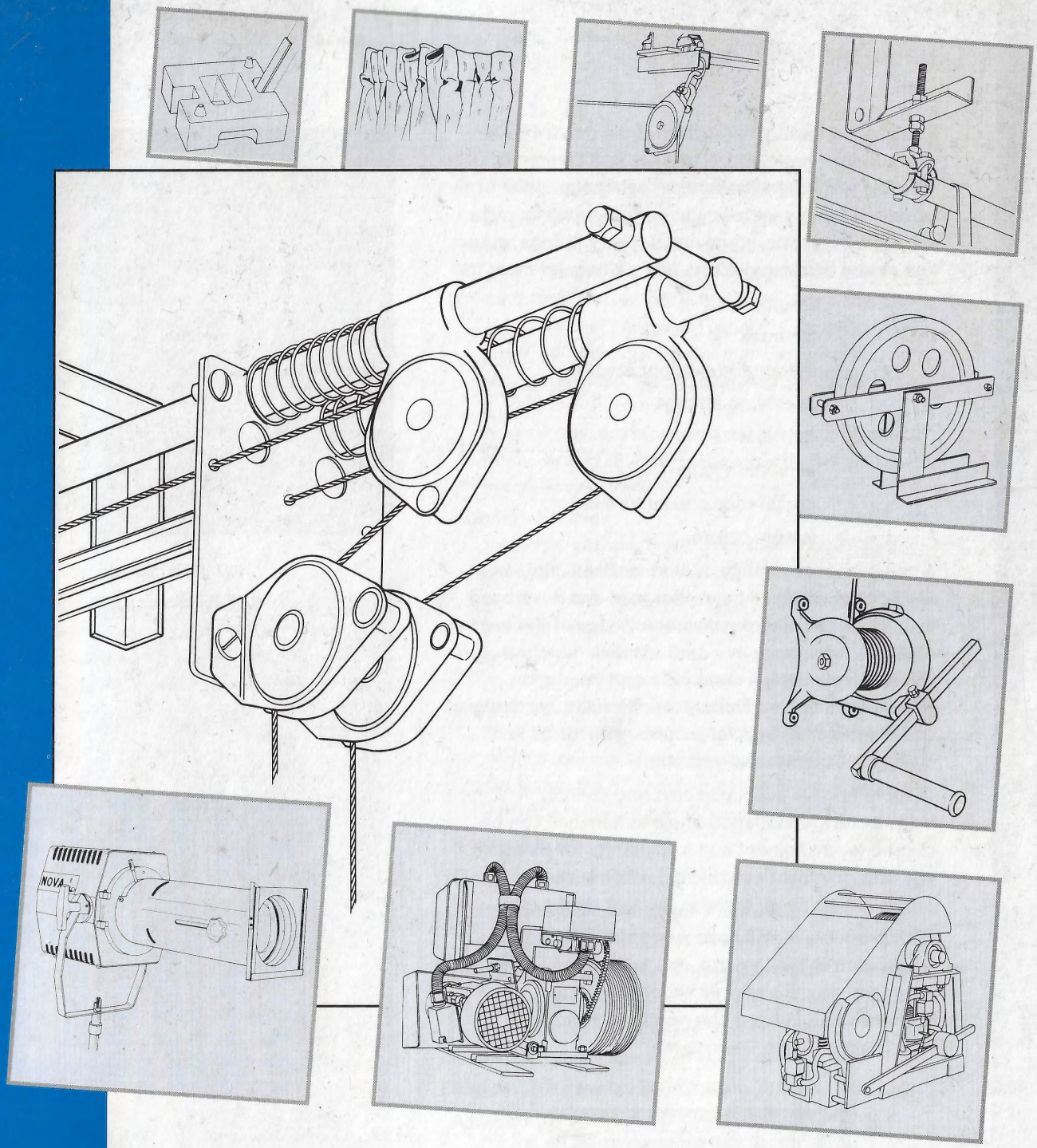

THE BIGGEST NAME BACKSTAGE

HARKNESS HALL LIMITED

Harkness Hall Limited

Established during the heyday of the theatre over one hundred years ago, Harkness Hall Limited is 'The Biggest Name Backstage', being one of the world's leading specialists in curtain tracking, raise and lower systems, stage and scenery fittings, stage and studio lighting systems and a whole lot more for

- theatres
- cinemas
- indoor and outdoor stages
- television studios
- film sets
- exhibition halls
- conference and lecture halls
- leisure centres

A comprehensive range of standardised equipment and accessories has been designed and developed with a practical and detailed knowledge of the needs of the entertainment and audio-visual industries, where simple design combined with long and reliable service, is a "must". Additionally, we design and manufacture special-purpose structures for many applications and industries.

Comprehensive packages covering design, manufacture, installation *and* maintenance can be offered for equipment and furnishings for theatre and entertainment complexes, which include projection screens, curtains, curtain tracks etc.

With products in daily use worldwide - including 90 per cent of the theatres and halls in the United Kingdom - and a pedigree second to none - Harkness Hall Limited can rightly claim to be 'The Biggest Name Backstage'.

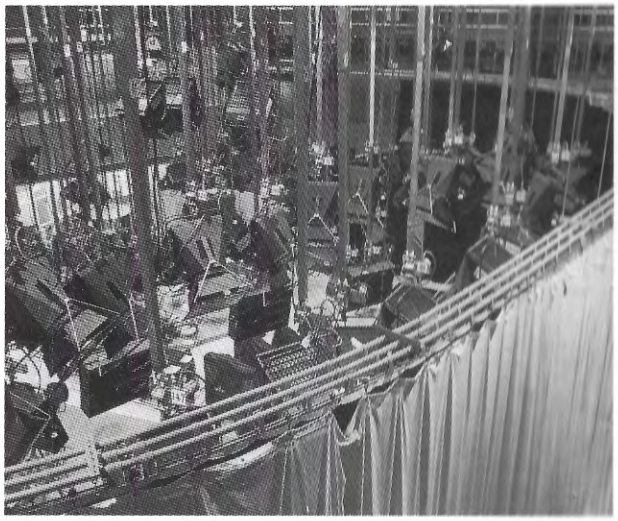

TV Studio

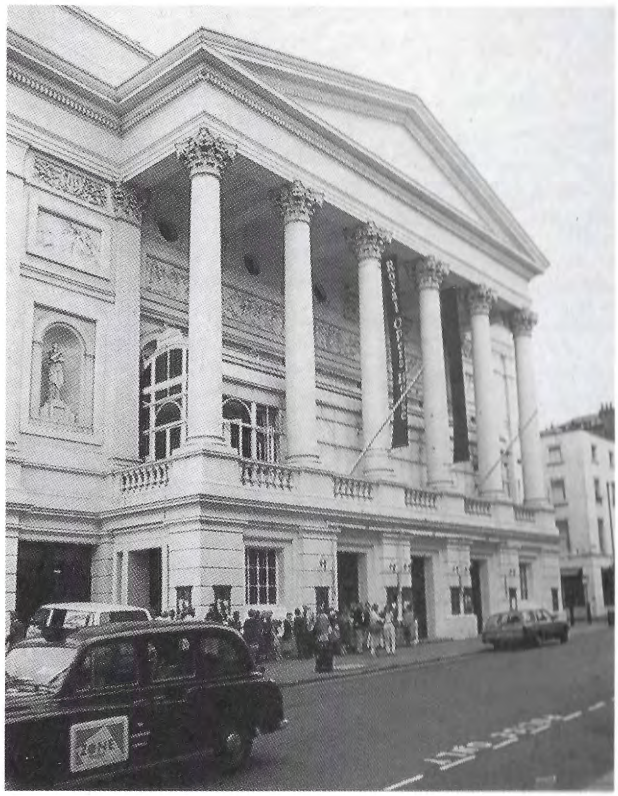

The Royal Opera House, Covent Garden, London

Harkness Hall Limited

The Gate Studios Station Road
Boreham Wood Herts WD6 1DQ
England

Tel: 0181 953 9371
and 0181 953 3611

Fax: 0181 207 3657

PRODUCT IMPROVEMENT
In the interests of product improvement the Company reserves the right to introduce modifications or alterations without notice.

Contents

	Page
General Guide for Selecting Tracks	**2**
T400 Curtain Track and accessories	**3, 4**
All accessories for fixing and fitting straight , curved and overlap track	
(Assembly drawing see pages D3, D4)	
T60 Curtain Track and accessories	**5, 6**
All accessories for fixing and fitting straight, curved and overlap track	
(Assembly drawing see pages D1, D2)	
T70 Curtain Track and accessories	**7, 8**
All accessories for fixing and fitting straight, curved and overlap track	
(Assembly drawing see pages D5, D6)	
Accessories and Components T60	**9**
Track pulleys, diverter pulleys, slide/wheeled runner carriers, floor fixing handline pulley, guide pulleys, support pulleys, line pulleys, line guides, overlap clips, stop brackets, joint bolt set	
Swivel Arms and Actions	**10**
Tube/wood/ girder fixing swivel arms	
Fixing Fittings T60	**11, 12**
Tube/girder fixing clip, deadline suspension fitting, barrel fixing clip, face fixing bracket, coachscrew fixing	
Special Track Systems and Carriers	**13**
Studio/cyclorama track, rearfold track, ballraced carriers	
T200 Curtain Track and accessories	**14**
All accessories for fixing and fitting track	
Drapes, Curtains, Cycloramas	**14a/b**
Front of house (FOH) tabs, stage travellers, borders, legs, flat/curved/wraparound cyclorama cloths, finishes, materials, order/enquiry procedure	
Pulley and Hauling Line Arrangements	**15**
Manual Winches	**16**
Floor fixing and wall fixing handwinches, truck and revolve winches.	
Wall fixing bracket for Anglia curtain controller	
Pile Wind Winches	**16a**
Electric and manual	
Anglia Curtain Controller	**17**
Anglia curtain controller, curtain controller push button box (wall fixing bracket see page 16)	
Curtain Controllers and Hoists	**18**
Curtain controller no's 997 and 962. Hoists up to 1 tonne capacity	

	Page
Grid Rigging and Suspension Gear	**19 - 26**
Border barrel sets and components list (19), scenery hand rope sets, steel wire rope S.W.L. and accessories (20), stage lighting suspension equipment and components list (21), fit-up pulley, grid pulley, girder fixing pulley, awning pulley, timber or ceiling fixing pulley (22), upright guide pulley, slide fixing guide pulley, machined gear hoist, swivel clew (23) sandbag, hanging ring, coach eye, barrel sling, thimble, shackle, cable grips, strainer, 'U' bolts and plates, hookbolt (24) London pattern pulley blocks, gin blocks, tirfors, webbing slings (25) cable and wire rope cutters, internally wired bars (26)	
Scenery Fittings	**27 -32**
Brace eye, extension brace, stage screw, brace weight, pelmet clips and sockets - hook iron, socket, 'L' iron, extension plug, extention socket (27) steel backflap. loose pin hinge. hinge pin, single/double action spring hinge, rubber tyred castor, doorstop, jointing plate, grummet (28) tie off/flyrail/throwline cleats, sisal rope, sashline, grummet, ring plate, hanging/flying/plate/lipped irons (29) stud/peg plates, thumb screw, boss plate, ceiling plate with/without ring (30) universal fitting, tabhook, twinhook, top batten clip, barrel sling, 'U' bolt fixing (31) hanging ring, fixing iron, adjustable girder clip, barrels, sandbag (32)	
Projection Screens	**32**
Counterweighting	**33**
Grid pulley, single/double purchase cradle, rope return pulley, lever rope lock, counterweights	
Counterweighting and Safety Curtains	**34**
Service and maintenance, counterweight sets and board, counterweight head sheaves, rope locks and counterweight cradle, safety curtain hoist	
Assembly Drawing T60 Curtain Track	**D1, D2**
Assembly Drawing T400 Curtain Track	**D3, D4**
Assembly Drawing T70 Curtain Track	**D5, D6**
Stage and Studio Lighting	**L1 - L14**
Hard edge beam lantern, soft edge beam lantern (L1) fresnel soft edge beam lantern, halogen linear lantern (L2) follow spot, follow spot dimmer (L3), pebble convex lantern, floodlight (L4), fresnel lantern, pebble convex lantern (L5), stage effect light, motorised shutter dimmers (L6), control unit, satellite controls (L7), power packs (L8), lighting desks (L9 -10), lighting controller, demultiplexer (L11), power controller, dimmer packs (L12), lighting bars, drama lighting stand (L13), Zarges ladder (L14)	
Range of Draperies	**Back Cover**
Stage curtains, draw, festoon, contour, roller curtains/ maskings, frame screen masking systems, scenic cloths, materials - velvets, trevira, dim-outs, serge and meltons, stage scenery materials.	

General Guide for Selecting Tracks

Semi-Domestic & Board Rooms	No.T-200 Curtain Track	SEMI-DOMESTIC & BOARD ROOMS	Page 14
The Cabaret Stage	No.T-400 Curtain Track	THE CABARET STAGE	Pages 3, 4
Auditorium window curtains	No.T-400 Curtain Track	AUDITORIUM WINDOW CURTAINS	Pages 3, 4
Crematorium curtains	No.T-400 Curtain Track	CREMATORIUM CURTAINS	Pages 3, 4
The drama school cyclorama track	No.T-400 / No.T-60 Curtain Track	THE DRAMA SCHOOL CYCLORAMA TRACK	Pages 3, 4, 5, 6
Small stage - Tracks for masking curtains	No.T-400 / No.T-60 Curtain Track	SMALL STAGE - TRACKS FOR MASKING CURTAINS	Pages 3, 4 5, 6
Small stage - Intermediate tracks	No.T-400 / No.T-60 Curtain Track	SMALL STAGE - INTERMEDIATE TRACKS	Pages 3, 4 5, 6
Small stage - Proscenium tracks	No.T-400 / No.T-60 Curtain Track	SMALL STAGE - PROSCENIUM TRACKS	Pages 3, 4 5, 6
Cyclorama track	No.T-400 / No.T-60 / No.T 70 Curtain Track	CYCLORAMA TRACK	Pages 3, 4 5, 6 7, 8
Large theatre or opera house	No.T-70 Curtain Track	LARGE THEATRE OR OPERA HOUSE	Pages 7, 8
Touring theatres	No.T-70 Curtain Track	TOURING THEATRES	Pages 7, 8
Television cycloramas	No.T-70 Curtain Track	TELEVISION CYCLORAMAS	Pages 7, 8
Large theatre or opera house stage	No.T-70 Curtain Track	LARGE THEATRE OR OPERA HOUSE STAGE	Pages 7, 8
Proscenium track	No.T-70 Curtain Track	PROSCENIUM TRACK	Pages 7, 8
Spare tracks for hanging on counterweight sets	No.T-70 Curtain Track	SPARE TRACKS FOR HANGING ON COUNTERWEIGHT SETS	Pages 7, 8

Catalogue Number	Max. length overlap length	Max. span between suspension points	Max. weight per runner	Max. overlap	Bunching length of runners	Use with controller
No.T-200	10m	300mm	1.50 Kilo	300mm	15mm	997
No.T-400	15m	500/600mm	2.50 Kilo	500mm	25mm	997/960/961
No.T-60	18m	1.75/2.25m	4.00 Kilo	1m	35mm	960/961
No.T-60/B	18m	1.75/2.25m	6.00 Kilo	1m	35mm	960/961
No.T-70	Any length	4m	7.00 Kilo	1m	35mm	960/961/special
No.T-70/B	Any length	4m	9.00 Kilo	1m	35mm	960/961/special

NOTE - The above figures are for guidance only. Weight of curtain material will directly influence considerations on span and runner loadings.

HARKNESS HALL LIMITED THE GATE STUDIOS STATION ROAD BOREHAM WOOD HERTS WD6 1DQ TEL: 0181 953 9371 / 3611 FAX: 0181 207 3657

No. T400 Compact Track

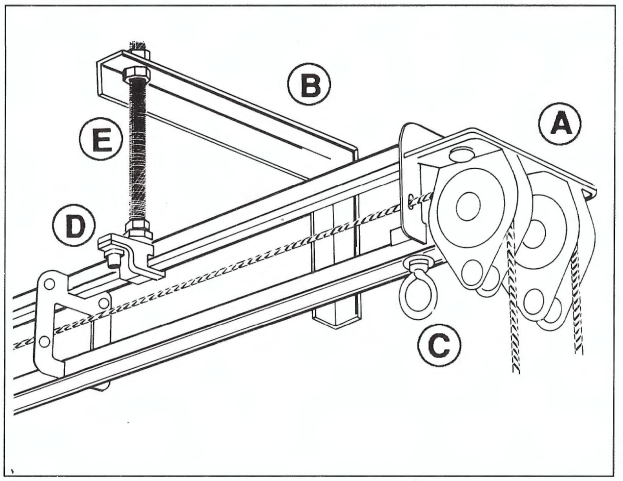

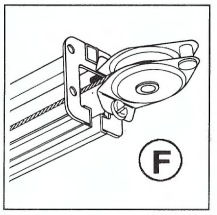

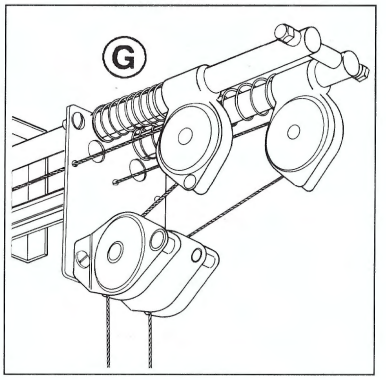

A	Sashline head pulley	C/HP
B	Face fixing bracket	C/FF
C	Stop bracket	C/SB
D	Stud fixing	C/SF
E	150 x M8 stud	C/HB
F	Return pulley	C/RP
G	Cable head pulley	C/CP

The compact T400 Curtain Track System has been designed as a light duty track, most suitable for use with smaller stages and large windows.

Other areas in which this curtain track system has proved it's versatility are in small television and video studio cycloramas, especially where chromakey double tracks are required in a restricted area, school drama, auditorium windows and also crematoria curtains.

The method of working the Compact T400 Curtain Track may be either electric controller, handwinch, handline or walkalong methods.

Manufactured from steel and electrically welded, this track is available in a standard range of straight and curved track sections from which it is possible to construct an infinite range of track configurations, all joints being interchangeable. Slides for the Compact T400 Track have a maximum loading capability of 1.70 kilos and these should be spaced at 200mm intervals along the curtain head length of track.

The recommended maximum length of track in normal use is 10 metres, this figure applies to both single and overlapped tracks. Electric Controller No. 997 is primarily designed for use with the T400 Track System.

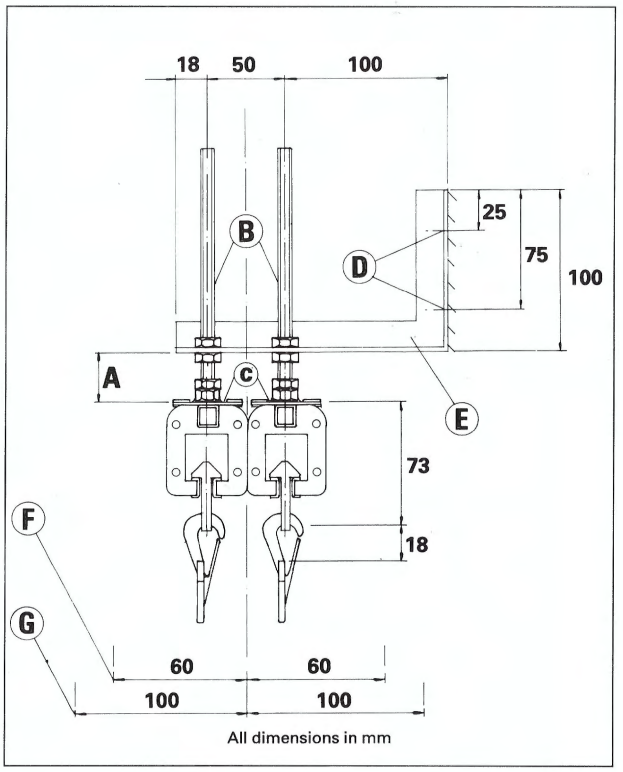

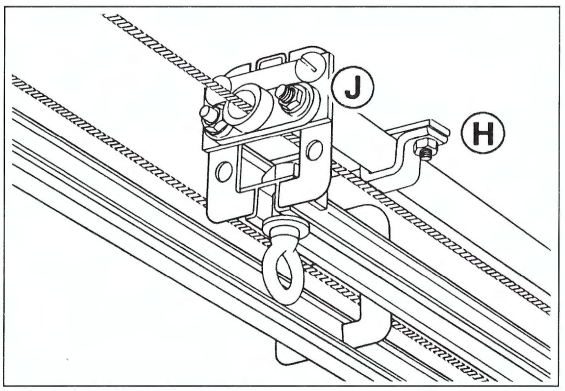

H	Overlap clip	C/OC
J	Line guide	C/LG

A	Degree of adjustment between 15mm - 130mm	
B	Stud bolt	C/HB
C	Stud fixing saddle	C/SF
D	8.50mm dia fixing hole	-
E	Face fixing bracket	C/FF
F	Recommended ceiling recess for tracks	-
G	Recommended clearance for curtains	-

No T400 Track

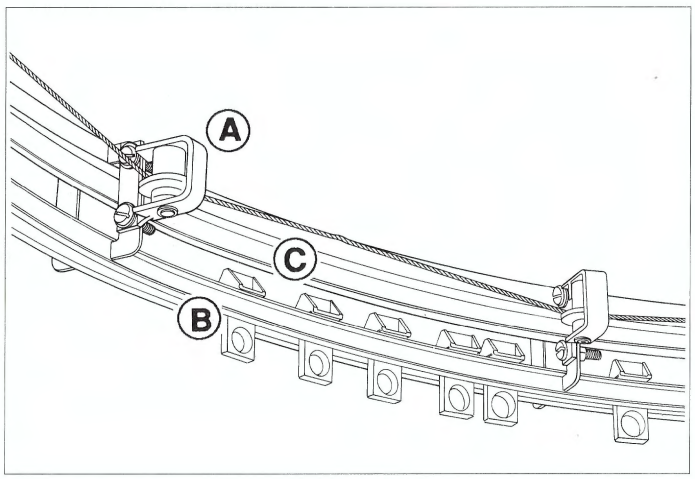

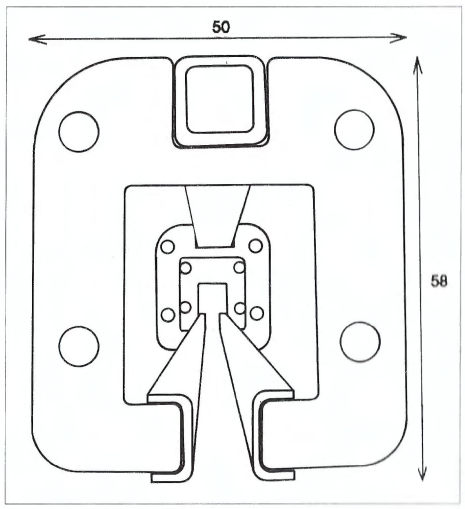

T400 Compact Track (Actual Size)
All dimensions in mm

TYPICAL CURVE SECTION

A	Guide Roller	C/GR
B	Standard Roller	C/SC
C	Guide Rail	-

Standard Fixing Arrangements

A standard range of suspension fittings are manufactured for use with the Compact T400 Track System. In most cases they allow for final curtain height adjustment, particularly useful where fabric is inclined to shrink or drop following cleaning.

All suspension fittings should be spaced at intervals not exceeding 1.5 metre along the legth of the track and 1.00 metre where the bunched curtain is stored.

Any fixing required which is not covered by our standard range can be easily fabricated to order.

D	Slider Leader	C/SL
E	Top Fixing Saddle	C/TF
F	150 X M8 Stud	C/HB
G	250 X M8 Stud	C/HB
H	Stud Fixing Saddle	C/SF
J	Tube Clip - for 37-60mm tube (specify size required)	C/TC
K	Suspension Cable	336
L	Deadline Fixing Saddle	C/CF
M	Girder Clamp -adjustable for 75-150mm flange	C/GF

Timber Fixing

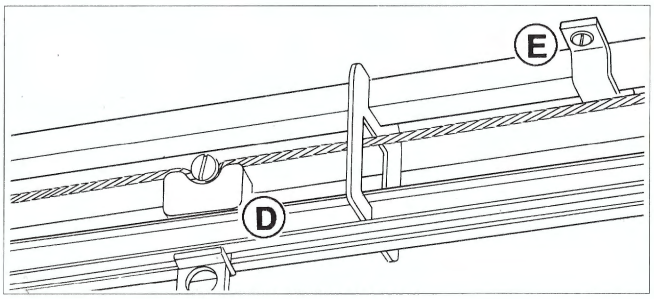

Tube Fixing

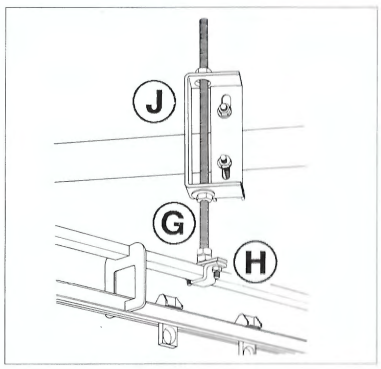

Suspended Fixing

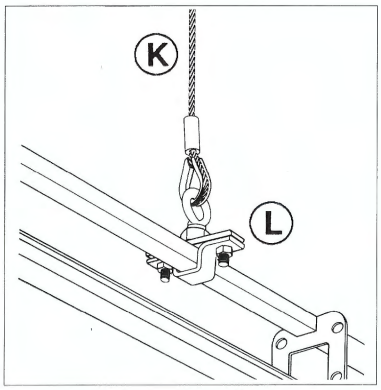

Stud Fixing

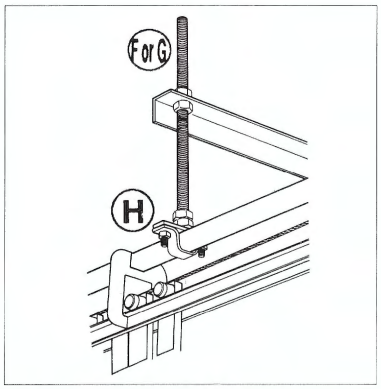

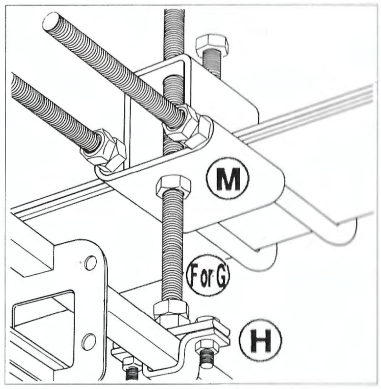

HARKNESS HALL LIMITED THE GATE STUDIOS STATION ROAD BOREHAM WOOD HERTS WD6 1DQ TEL: 0181 953 9371 / 3611 FAX: 0181 207 3657

No. T-60 Anglia Curtain Track

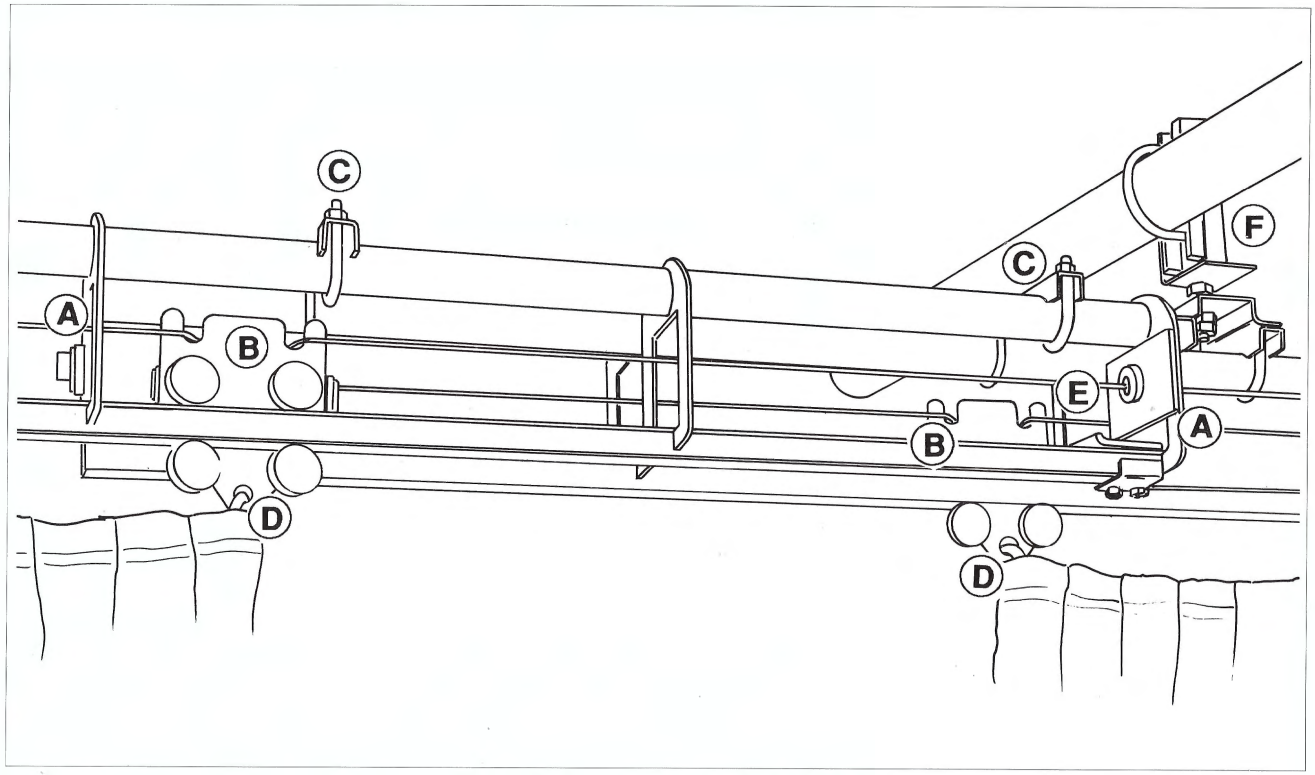

The Number T-60 Anglia Curtain Track is designed to meet the requirements of most small and medium sized stages. The method of working this curtain track may be either by electric controller, handwinch, handline or walkalong method.

Manufactured from steel and electrically welded - the track is designed to allow a wide variety of curtain track configurations to be assembled at stage level with the various components, hauling line and fittings attached, ready to be hoisted and fixed in its working position.

A range of suspension fittings are manufactured for use with the T-60 track. In most cases these allow for final height adjustment. All suspension fittings should be spaced at intervals not exceeding 2.25m along the length of the track.

The maximum recommended length of the No. T-60 Curtain Track is 18m for overlapping track and 9m for single tracks, with a maximum carrying capacity per carrier of 4 Kilo each.

T-60 tracks are also available fitted with ball raced wheeled runners and leaders, which increases the load capacity of each runner to 6 Kilo.

A	Line Guides	A/LG
B	Wheeled runner / slider master straight tracks	A/MCW
C	Overlap Clips	A/OC
D	Tabhook	287
E	Stop brackets	A/SB
F	Tube fixing clip	A/TC

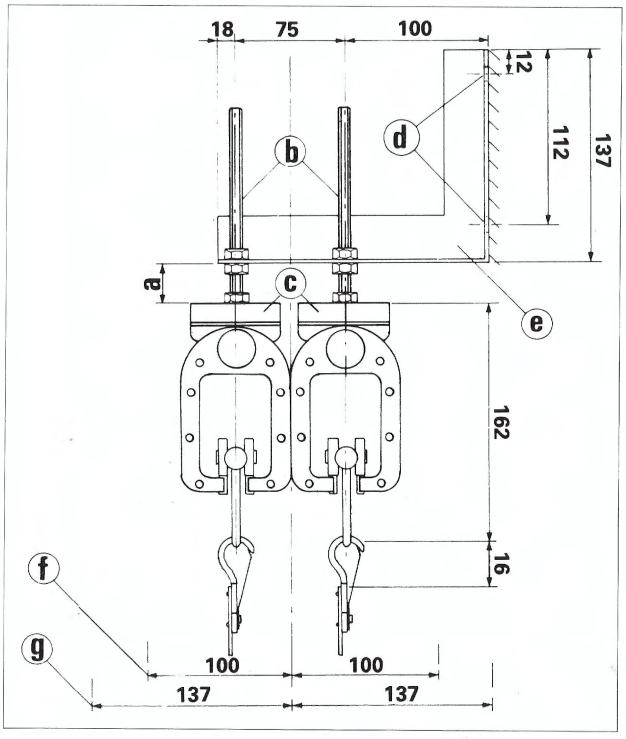

a	Degree of adjustment between 16mm - 100mm
b	Stud Bolts 10mm dia in 150/225/300 lengths
c	Universal Fitting A/HB, A/UC
d	10mm dia Bolt Holes
e	Face Fixing Bracket A/FF 137 x 193
f	Recommended clearance for track
g	Recommended clearance for curtains

All dimensions in mm

No. T-60 Anglia Curtain Track

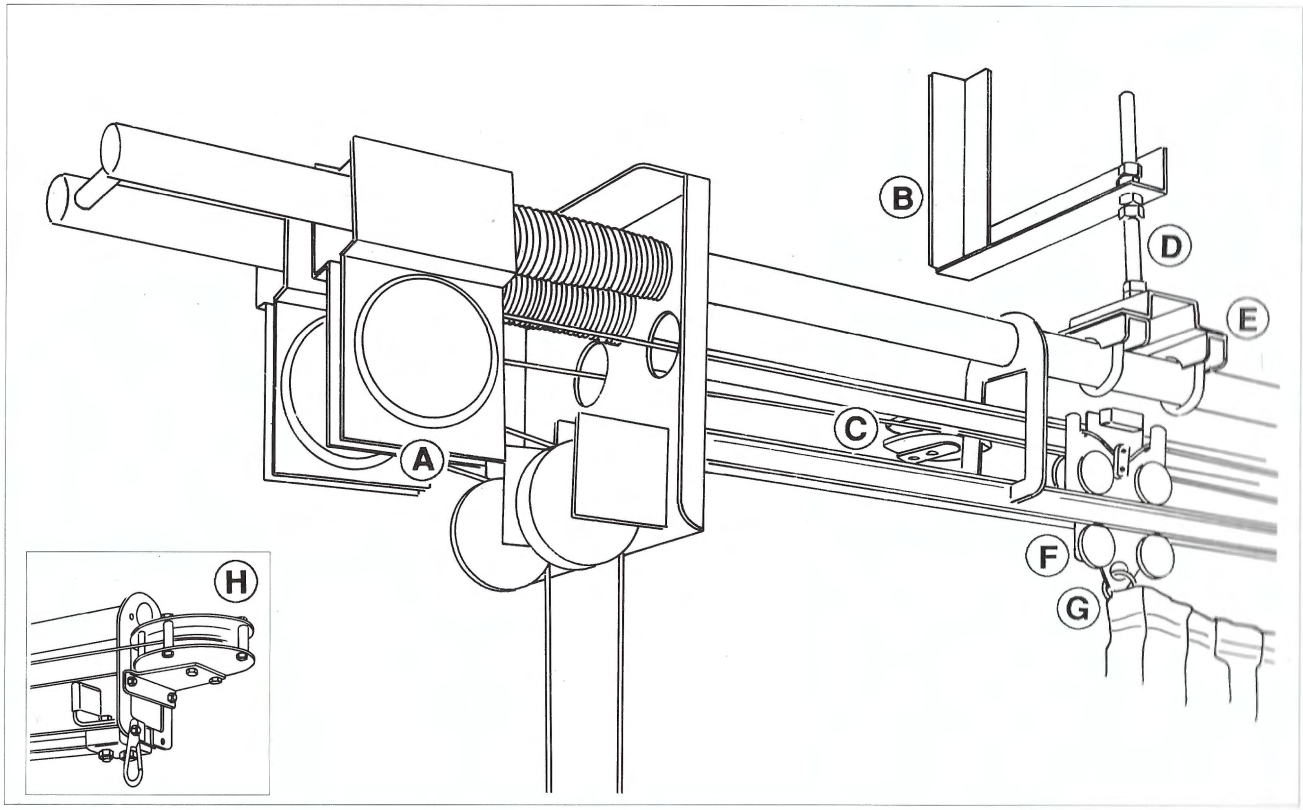

A proscenium track should be long enough to allow the curtains to clear the opening when in the "off" positition. For proscenium openings up to 6m wide the track should be 1m longer than measurement X below (proscenium opening).

For openings between 1m and 9m track should be 1.5m longer.

For openings between 9.1m and 12m track should be 2m longer.

For openings between 12.1m and 15m track should be 2.5m longer.

For openings between 15.1m and 18m track should be 3m longer.

The figures given above apply to T-400, T-60 and T-70 Curtain Tracks.

A	Electric controller cable head pulley.	A/CP
B	Face fixing bracket	A/FF
C	Guide pulley	A/GP
D	150 x M10 stud	A/HB
E	Universal clip	A/UC
F	Wheeled runner master for curved track	A/MCWG
G	Tabhook	287
H	Return pulley	A/RP

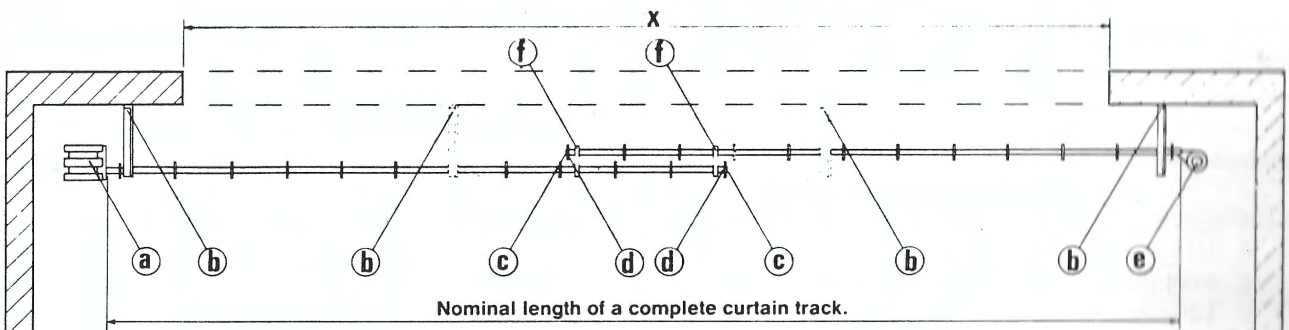

a	Handline Head Pulley	A/HP
b	Face fixing bracket	A/FF
c	Line guide	A/LG

d	Stop bracket	A/SB
e	Return pulley	A/RP
f	Overlap flaps	A/OC

When a curtain track is operated by an electric controller a further 300mm should be added to the length to give a 150mm safety margin for over-run.

HARKNESS HALL LIMITED THE GATE STUDIOS STATION ROAD BOREHAM WOOD HERTS WD6 1DQ TEL: 0181 953 9371 / 3611 FAX: 0181 207 3657

No. T-70 Curtain Track

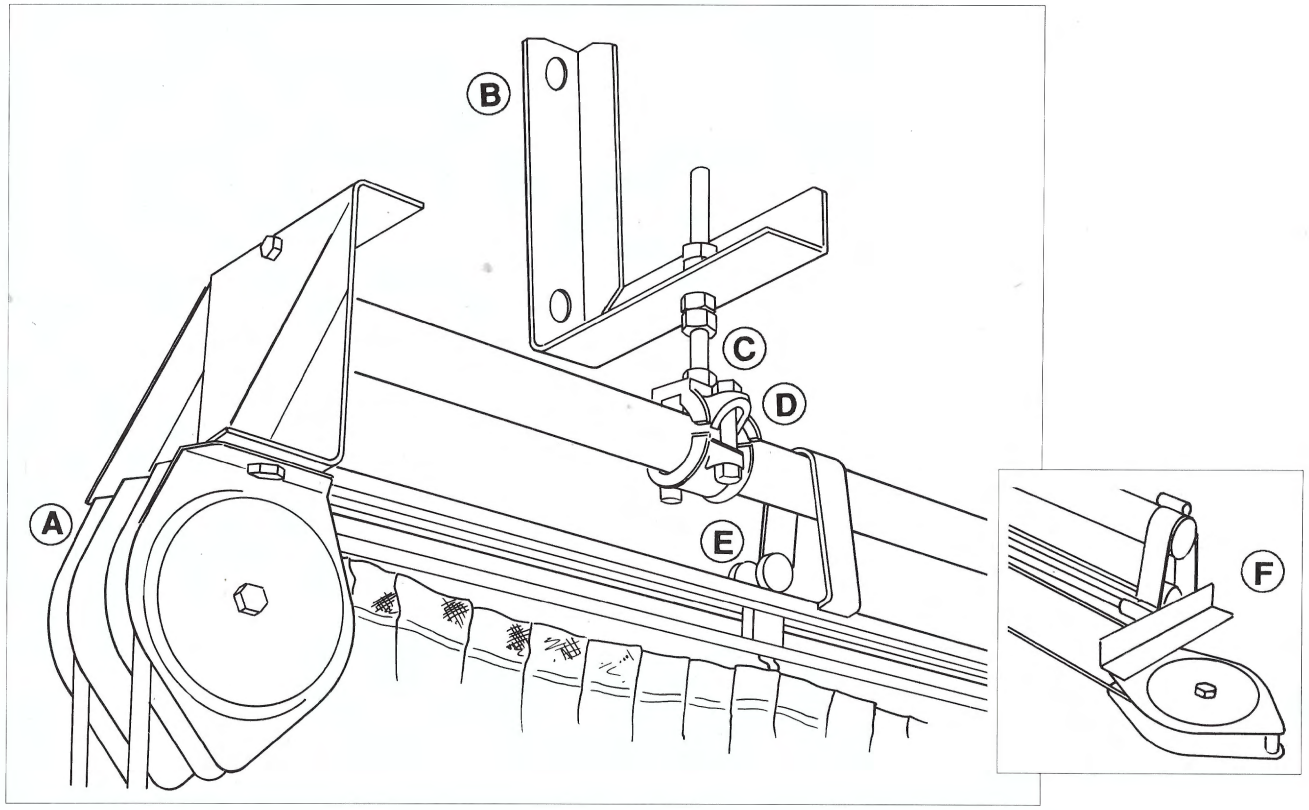

A	Sashline head pulley	T-70/254
B	Face fixing bracket 238mm x 244mm	T-70/288
C	Stud bolt 150mm x M12	T-70/302
D	Universal clip	T-70/232
E	Standard runner	T-70/229
F	Return pulley	T-70/253

The No. T-70 Curtain Track has, over the years, proved its reputation as one of the most versatile and dependable curtain tracks available to the entertainment industry. The main areas in which it is used being the large theatre, touring theatre, television studio cyclorama, cinema curtain track, and in most situations where heavy curtains are to be carried.

Methods of working the T-70 Curtain Track are by electric controller, hand winch, handline or walk along method. When controllers for tracks over 22m overlapped and 11m single are required, these are manufactured to suit our customers individual requirements.

Manufacture of the T-70 Curtain Track is from heavy guage steel, electrically welded. A range of track sections are available in both curved and straight sections, from which it is possible to construct a number of track configurations. We recommend a maximum carrying capacity of 7 Kilo per carrier for the T-70 curtain track, these should be spaced at intervals of 300mm. A variety of suspension fittings are manufactured for use with the curtain track, most of them allowing for final height adjustment. Sales orders are inclusive of basic track components, excluding suspension fittings which are charged at extra cost.

T-70 Curtain Tracks are also available fitted with ball raced wheel runners and leaders, which increases the load capacity of each runner to 9 Kilo.

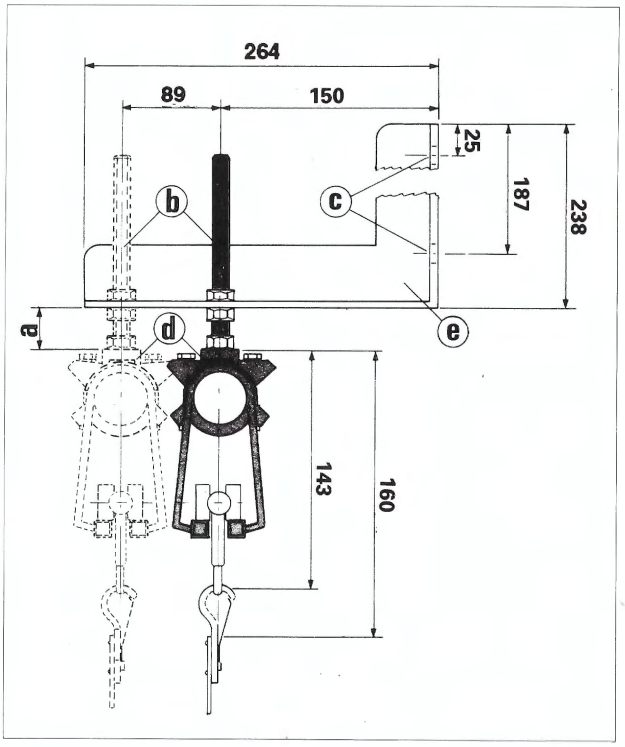

a	Degree of adjustment between 22mm-92mm	-
b	Stud bolts 12mm dia. in 150/225/300 lengths.	T-70/302
c	12mm dia. bolt holes	-
d	Universal clip	T-70/232
e	Face fixing bracket 244mm x 238mm	T-70/288

All dimensions in mm.

No. T-70 Curtain Track (Curved)

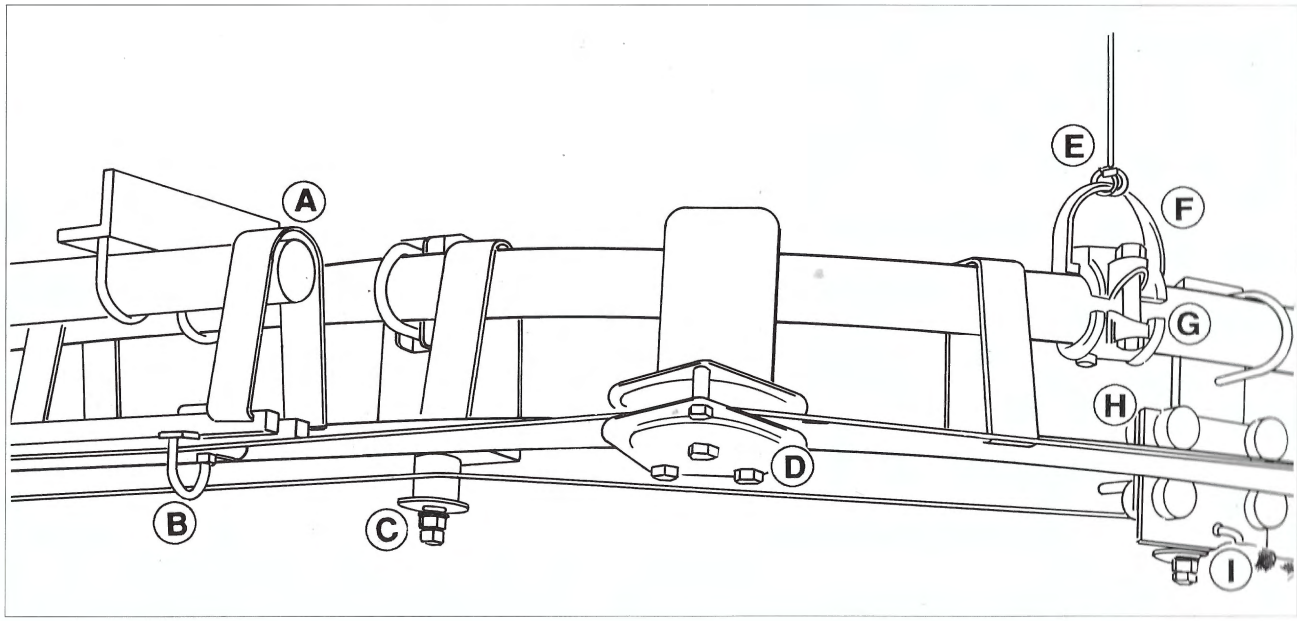

A	Overlap clip	T-70/230
B	Overlap stop	T-70/239
C	Curve single guide roller	T-70/242
D	Curve guide pulley	T-70/240
E	Cable grips	T-70/640
F	"D" Ring	T-70/223
G	Universal clip	T-70/232
H	Master carrier	T-70/259
I	Tabhook	287
J	Joint bolt fixing for track sections	T-70/260

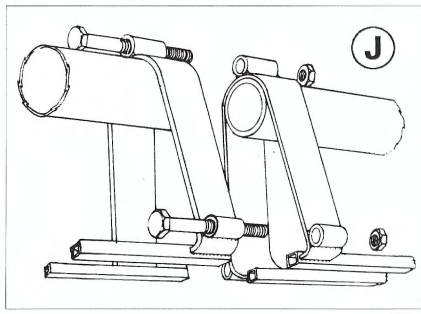

No. T-70 Curtain Track Equipment	Cat. No.
Stud bolt	T-70/302
Cable spring head pulley	T-70/255
Sashline head pulley	T-70/254
Return pulley	T-70/253
End stop with guide line	T-70/239
End stop with curtain ring	T-70/234
Curve guide pulley	T-70/240
Curve double guide roller	T-70/241
Curve single guide roller	T-70/242
Overlap clip	T-70/230
Universal clip	T-70/232
Joint bolt set	T-70/260
Ball-beraring master carrier	T-70/247
Standard master carrier	T-70/259
Ball-bearing carrier	T-70/231
Standard carrier	T-70/229
Face fixing bracket 244mm x 238mm	T-70/288
Weighted pulley	T-70/279
Floor fixing pulley	T-70/298
Girder fixing clip	T-70/337

HARKNESS HALL LIMITED THE GATE STUDIOS STATION ROAD BOREHAM WOOD HERTS WD6 1DQ TEL: 0181 953 9371 / 3611 FAX: 0181 207 3657

Accessories and Components (No. T-60 Curtain Track)

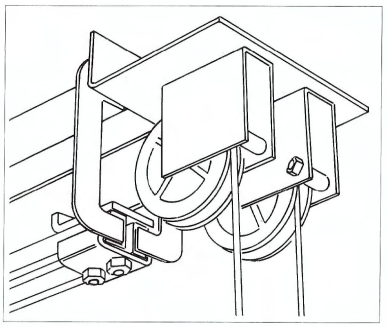

Track Pulleys	Cat. No.
Electric controller cable head pulley	A/CP
Electronic controller cable head pulley (tracks over 15m)	A/CPL
Handline head pulley	A/HP
Return pulley	A/RP

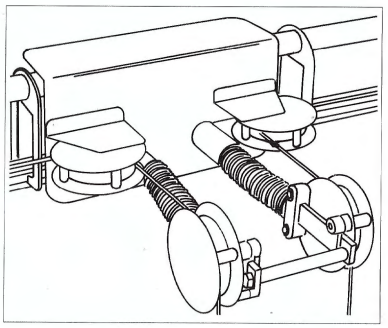

Diverter pulleys	Cat. No.
Electric controller wall fixing head pulley	A/TWCP
Handline wall fixing head pulley	A/TWHP
Upstage unsprung diverter pulley	A/TP
Upward drive diverter pulley	A/UDP
Through wall diverter pulley	A/DT
Upstage spring pulley	A/VP

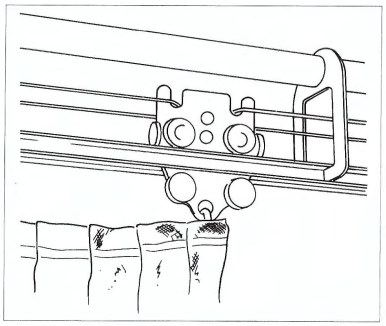

Carriers	Cat. No.
Slider carriers	A/SCS
Wheeled runner/slider master for straight tracks	A/MCW
Wheeled runner master for curved tracks	A/MCWG
Wheeled runner carriers	A/SCW
Wheeled runner ball-bearing masters - straight tracks	A/MCB
Wheeled runner ball-bearing masters - curved tracks	A/MCBG
Wheeled runner ball-bearing carriers	A/SCB
Wheeled runner carrier for swivel arm	A/SAC
Wheeled runner for scenery flat	A/WC

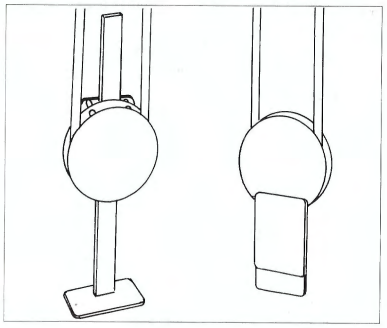

Components	Cat. No.
Floor fixing handline pulley	A/FFP
Weighted floor lift	A/WFP
Floor fixing handline pulleys and weighted floor pulleys are used to maintain a tension on handwork lines, where no alternative method of tensioning the line is used.	

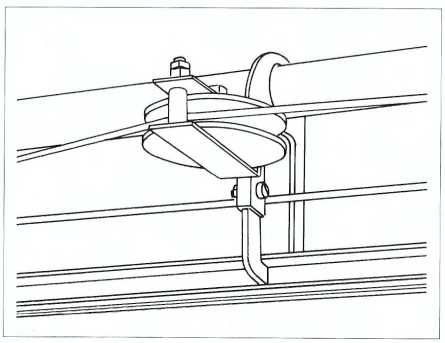

Curved track components	Cat. No.
Guide pulleys	A/GP
Support pulleys	A/SP
Line pulleys	A/LS

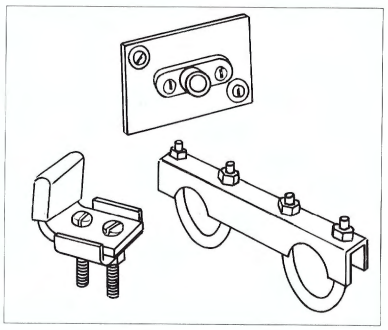

Components	Cat. No.
Line guides	A/LG
Overlap clips	A/OC
Stop brackets	A/SB
Joint bolt set	A/JB

Swivel Actions and Accessories

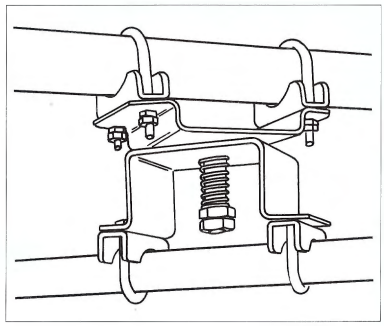

Tube Fixing Swivel Arms	Cat. No.
Swivel arms 750mm	382/3T
Swivel arms 1m	382/4T
Swivel arms 1.5m	382/5T
Swivel arms 2m	382/6T

These are available to clamp to 25mm/37mm/ 48mm/60mm - Please state requirement when ordering.

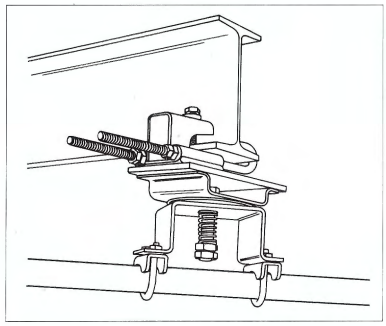

Girder Fixing Swivel Arms	Cat. No.
Swivel arms 750mm	382/3G
Swivel arms 1m	382/4G
Swivel arms 1.5m	382/5G
Swivel arms 2m	382/6G

Suitable for fixing to girders with flanges between 75mm and 150mm wide
Girder fixing clips for flanges over 150mm are manufactured to the customer's requirements.

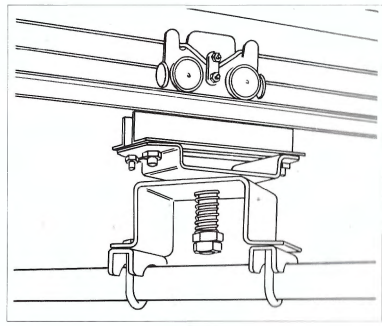

Wood Fixing Swivel Arms	Cat. No.
Swivel arms 750mm	382/3W
Swivel arms 1m	382/4W
Swivel arms 1.5m	382/5W
Swivel arms 2m	382/6W

Carrier Mounted Swivel Arm	Cat. No.
	A/SAC 382

Carrier mounted swivel arms for heavy duty tracks are available, generally manufactured to customer's requirements.
This arrangement is suitable for use with the T-60 track and is held in position by the hauling line being made fast.

Swivel Actions Only	Cat. No.
To WOOD fix	382/AW
To TUBE fix	382/AT
To GIRDER fix	382/AG

All Swivel Arms/Actions are available for use with No. 383 Drop Extension Fitting. Please state Drop Extension required when ordering

HARKNESS HALL LIMITED THE GATE STUDIOS STATION ROAD BOREHAM WOOD HERTS WD6 1DQ TEL: 0181 953 9371 / 3611 FAX: 0181 207 3657

Tube Fixing Clip (No. T-60 Curtain Track)

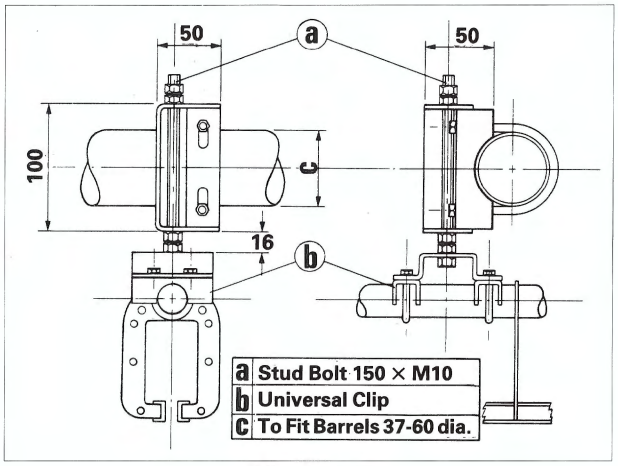

All dimensions in mm

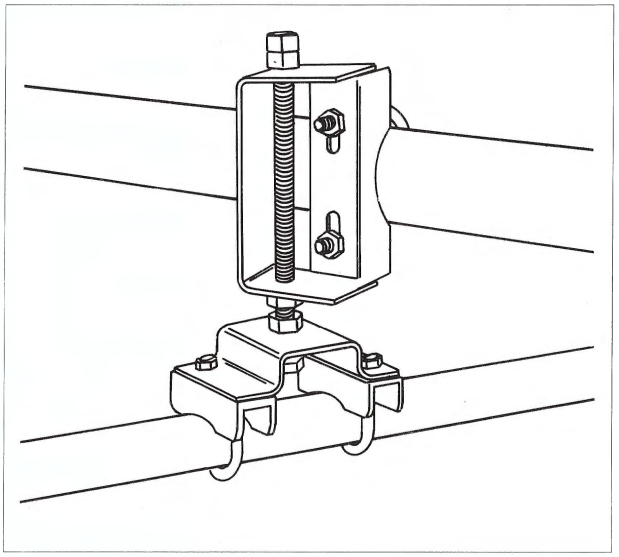

Girder Fixing Clip (No. T-60 Curtain Track)

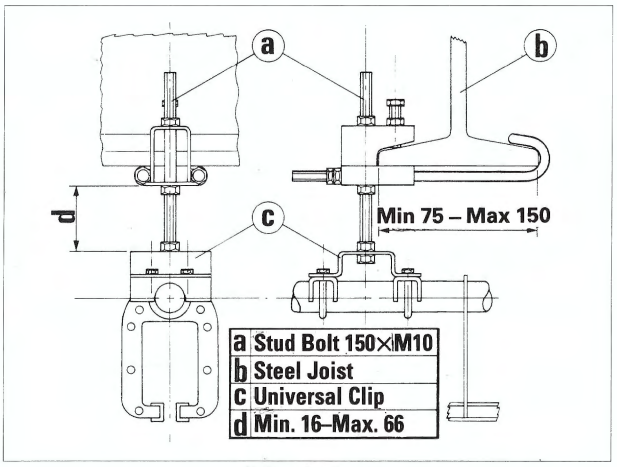

All dimensions in mm

For No. T-60 track suspension fittings the universal clip Cat. No. A/UC and Stud A/HB should be ordered in addition to the suspension fittings specified.

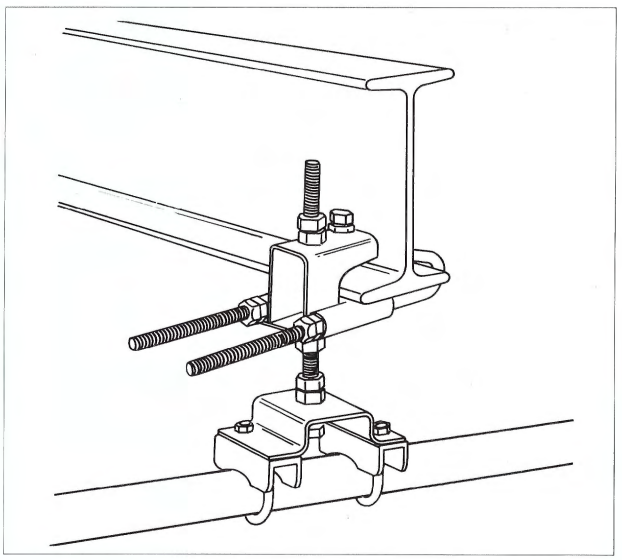

Deadline Suspension Fitting (No. T-60 Curtain Track)

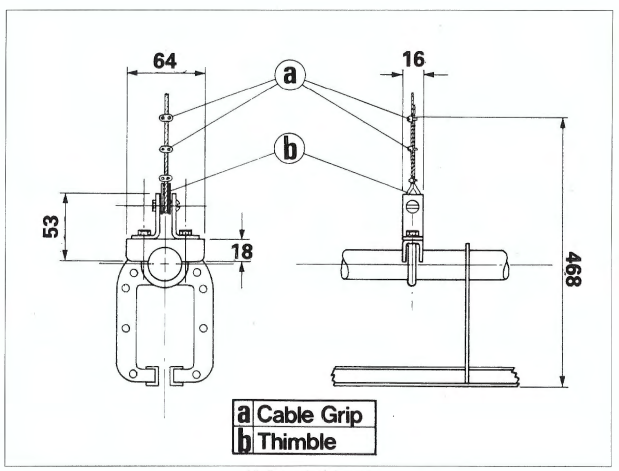

All dimensions in mm

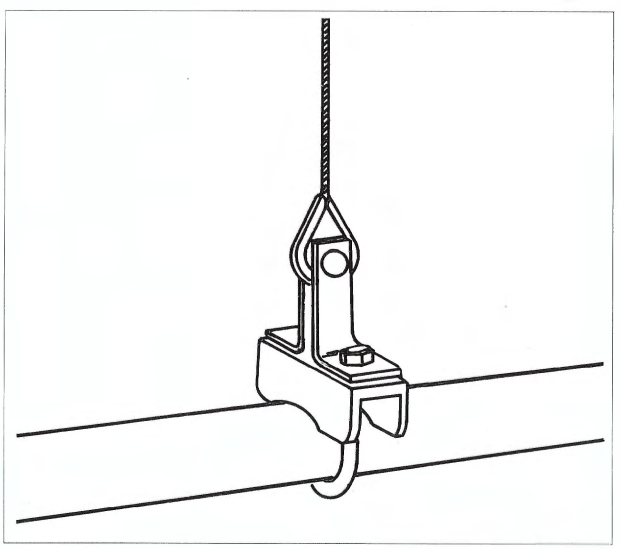

Barrel Fixing Clip (No. T-60 Curtain Track)

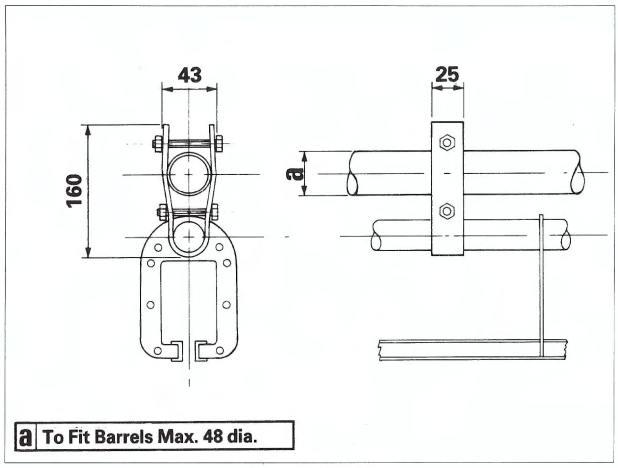

All dimensions in mm

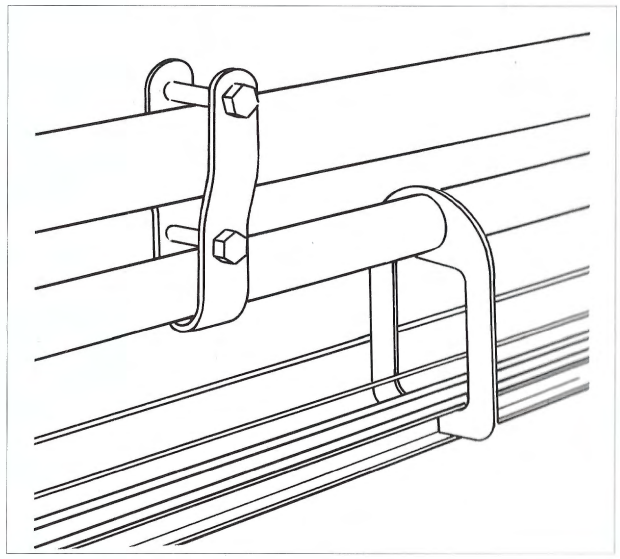

Face Fixing Bracket (No. T-60 Curtain Track)

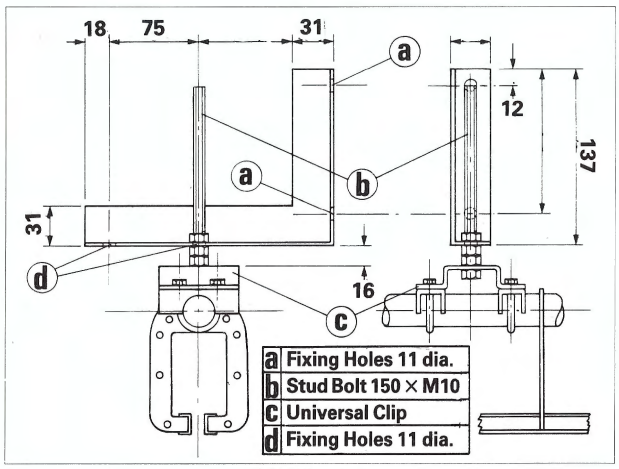

All dimensions in mm

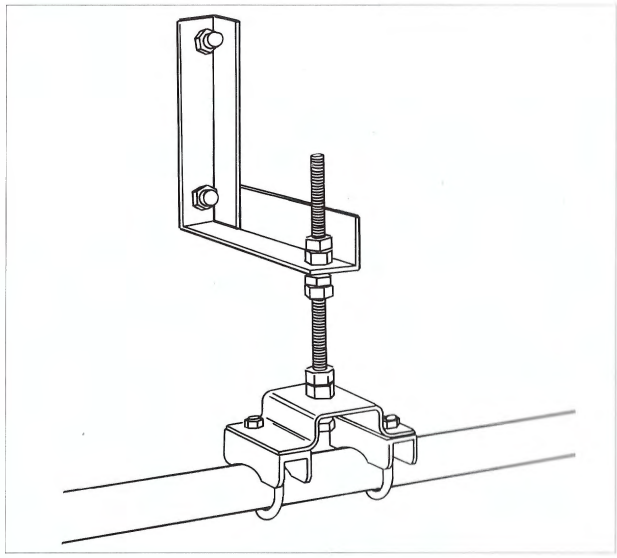

Coachscrew Fixing (No. T-60 Curtain Track)

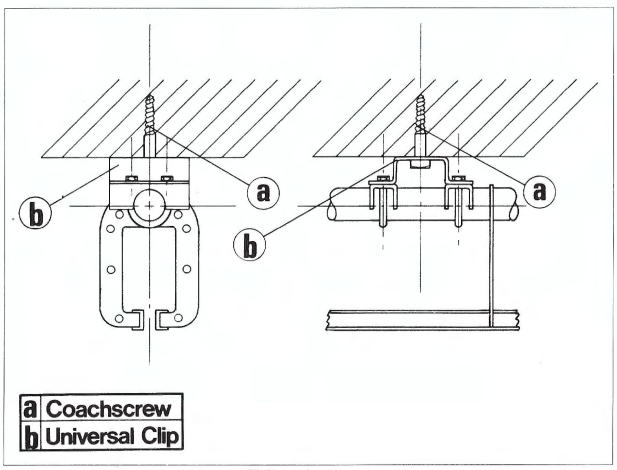

All dimensions in mm

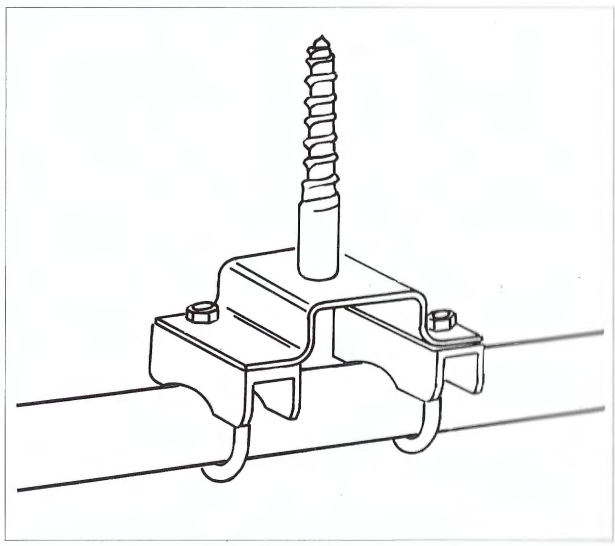

HARKNESS HALL LIMITED THE GATE STUDIOS STATION ROAD BOREHAM WOOD HERTS WD6 1DQ TEL: 0181 953 9371 / 3611 FAX: 0181 207 3657

Studio Track

We are able to fabricate tracks for any purpose for use in factories, T.V. studios, cinema, theatre etc.

The loadings that they can be put to depends on site conditions and span of fixing points.

However, we are able to modify or re-design any product to suit any need using any of our complete track systems.

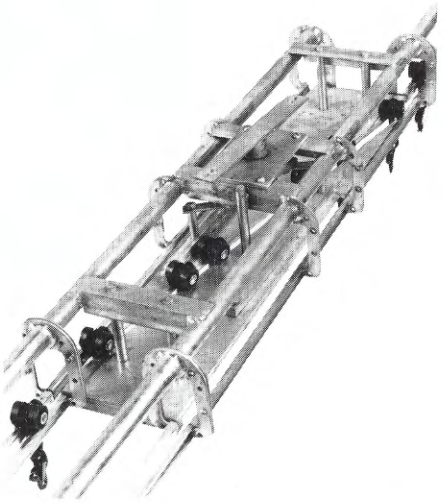

T-60 Cyclorama track points in "cross over" mode.

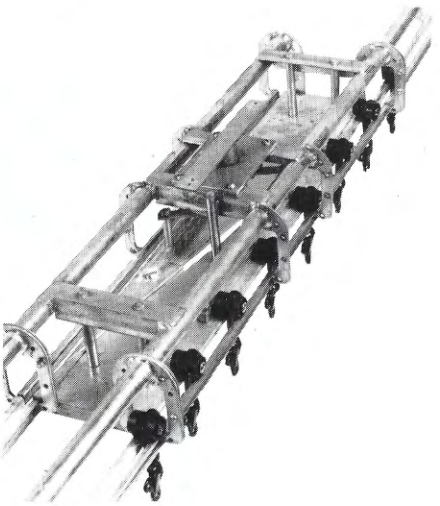

T-60 Cyclorama track points in "straight through" mode.

Rearfold Track (not illustrated)

This track is used where an evenly gathered or flat curtain is required as the curtain opens.

The cloth then bunches at the offstage end.

It can be handline, handwinch or electrically operated.

SPECIAL CARRIERS

We are able to fabricate any carrier to suit all our range of curtain tracks to carry lights, camera equipment, welding curtains etc.

Working of the special carriers may be by all the standard methods - electric controller, handwinch, handline or walkalong.

Both straight and curved tracks are suitable for use with special carriers.

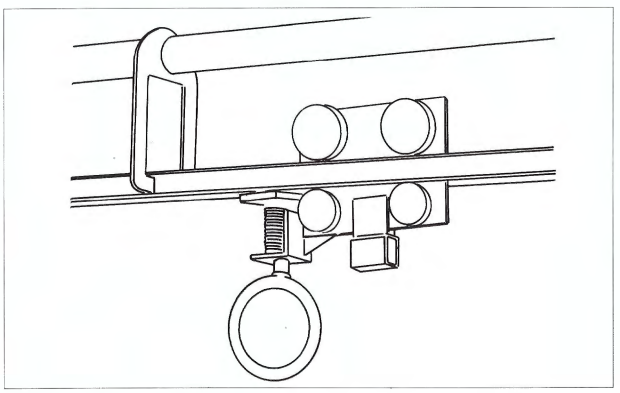

Ballraced carrier with internal spring lock for carrying lights etc. A hook pole is used to pull down the sprung ring thus enabling the unit to be moved to any position and locked.

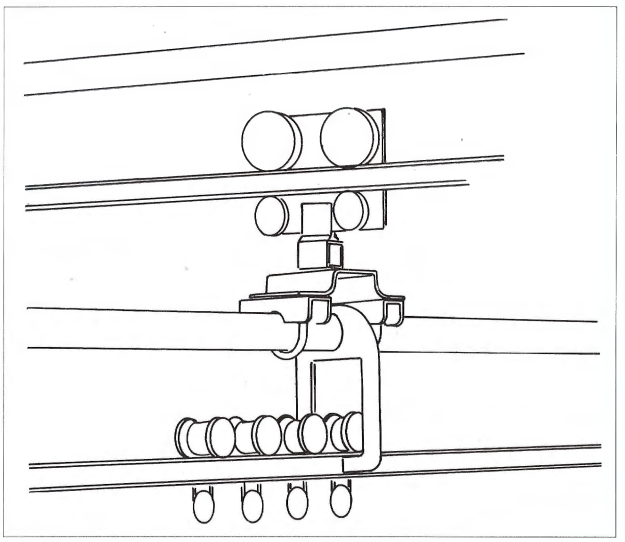

Ball raced carrier to support tracks running up-down stage.

The range of loadings that can be carried is dependant upon the span that the track is fixed at, but any modification can be made to either the track fabrication or the carrier to enable vitually any normal load to be used.

No. T-200 Curtain Track

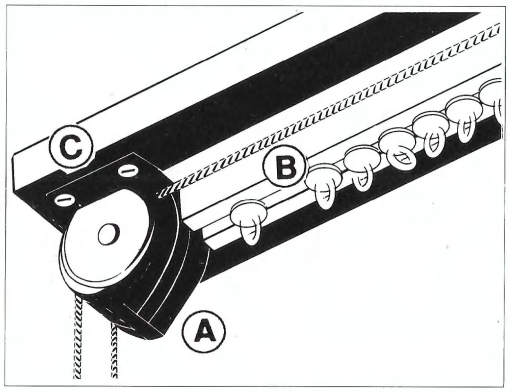

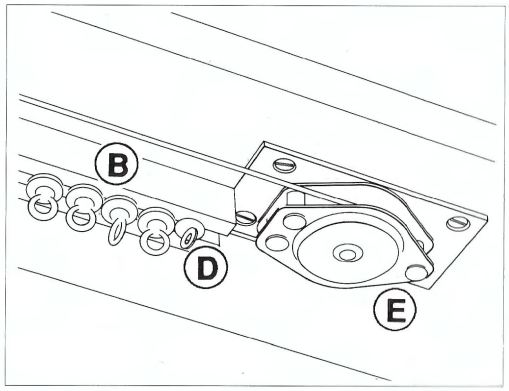

The T-200 Satin Curtain Track is designed for use where an unobstrusive track is required in the heavy domestic, club or boardroom situation. It is manufactured from continuously extruded alumimium, which is anodised to give a smooth satin finish.

The operation of the T-200 Satin Track can be handline, handwinch, electronic controller or walkalong method. The operating pulleys are moulded in self-lubricating nylon and are smooth and silent in use.

Fixing of the T-200 Track is by wood screws every 300mm through pre-drilled holes into an existing soffit board.

The T-200 Track can only be used where a straight overlapped or single curtain is required as all track sections are single piece, eleviating the need for joints. The maximum recommended length of the T-200 is 10 metres overlapped or 5.50 metres single track. The moulded nylon guides are spaced at 100mm centres and have a recommended maximum load of 0.5 kilo.

A	Handline head pulley	S/HP
B	Standard glide	S/GL
C	Woodscrew fixing	S/WS
D	End stop	S/ES
E	Return pulley	S/PR
	Cable head pully (not illustrated)	S/CP
	Leader glide (not illustrated)	S/MGL
F	Handline floor pulley	S/FFP
G	Handline weighted pulley	S/WFP

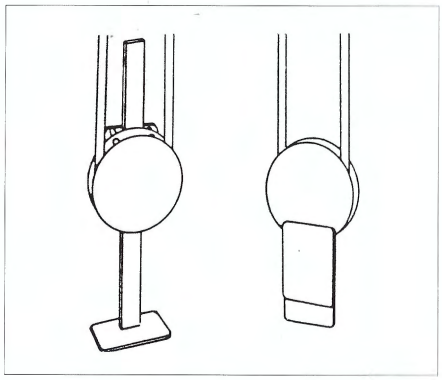

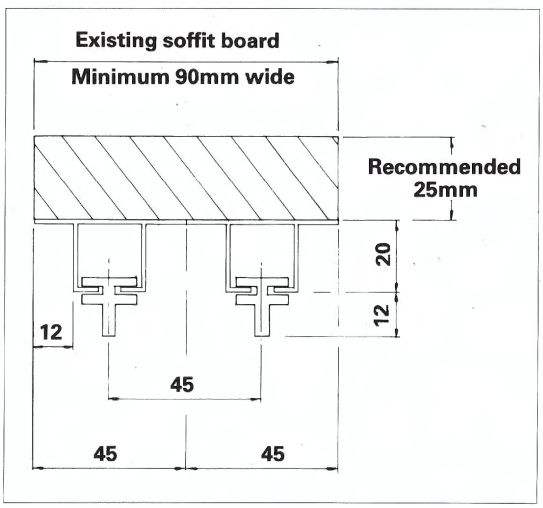

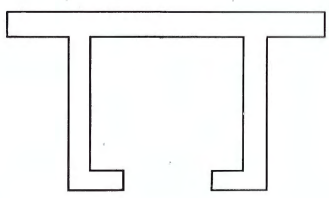

Actual Size

HARKNESS HALL LIMITED THE GATE STUDIOS STATION ROAD BOREHAM WOOD HERTS WD6 1DQ TEL: 0181 953 9371 / 3611 FAX: 0181 207 3657

Drapes/Curtains/Cycloramas

A full set of drapes comprises tabs, borders, legs and cyclorama cloth, plus any special items.

Front of House tabs (FOH)

Front of house tabs are large curtains, usually made of richly coloured velour material, which fill the proscenium arch.

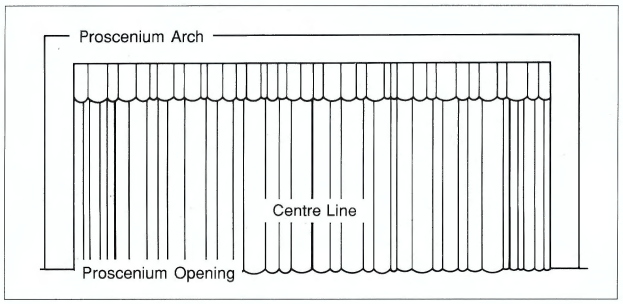

Often pleated for fullness, they may be lined with bolton twill or wool serge to help reduce the sound and light penetration between stage and auditorium.
Generally hung on curtain track they are drawn in from either side to overlap at their centre. With flying systems the whole drape may be flown in or out. There are other more exotic methods of closing the FOH tabs such as festoons and variable reefing etc.

Stage Travellers

Stage Travellers are intermediate sets of drapes set between the cyclorama and FOH tabs and can be made from any approved material.

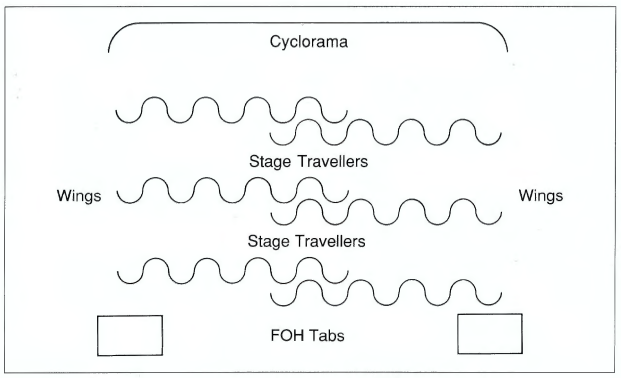

Borders

Borders are narrow lengths of material suspended at high level across the stage used to mask lighting bars, curtain track or flown scenery.
Generally black, but borders can be in any colour to match other stage drapes.

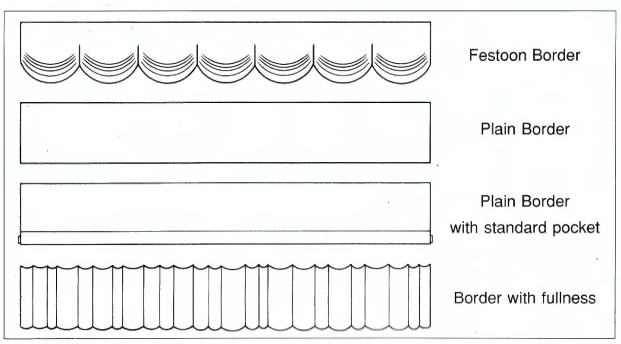

Legs

A leg is the narrow length of material, often black but can be any colour to match other stage drapes, hung at the side of the stage to mask the wings and side walls of the stage.

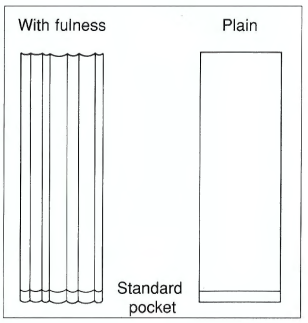

Typical leg positions

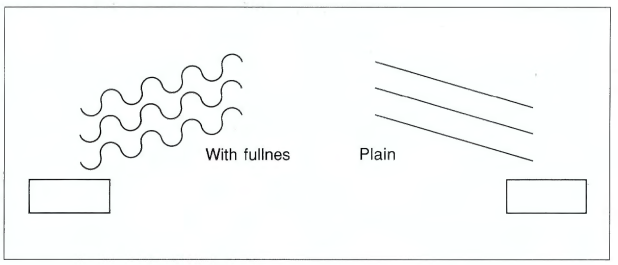

Flat Cyclorama Cloth tied to barrel

Where stage rear wall enhancement is necessary a cyclorama cloth will mask the rear wall and provide a smooth even surface. It is generally made of white material to provide a neutral base for lighting, or projection screen material for precise definition and special effects.

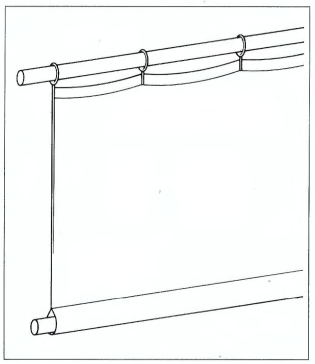

Curved Cyclorama

A curved cyclorama cloth is used on larger stage areas to produce a panoramic effect.

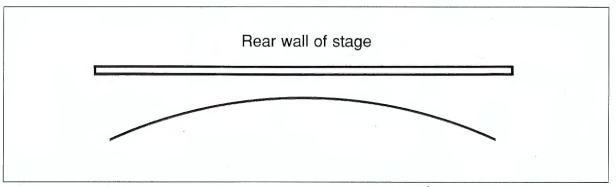

Wraround Cyclorama Cloth

The wraround cyclorama is a popular variation in television, video or still photographers studios.

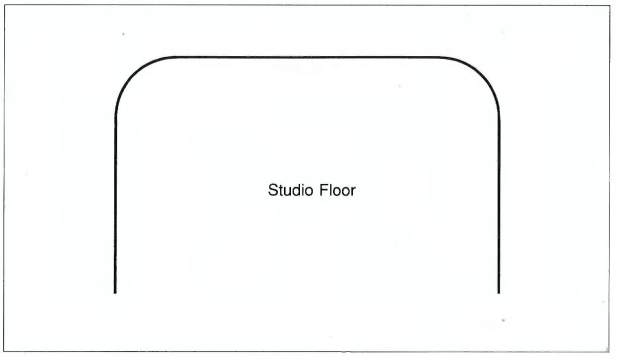

Finishes

Heading with tapes

Used for hanging drapes or cycloramas in a static position from a standard barrel or wooden batten or for travelling drapes on tab tracks. A webbing is stitched along the top edge of the drape with twin ties at regular intervals.

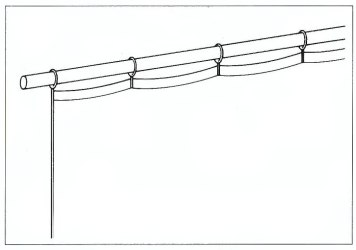

Twin hooks with eyelets

To hang travelling drapes from standard runners on tab tracks. Reinforced eyes are punched at regular intervals along the top edge of the drape and twin hooks are then clipped between the runner bobbin and the drape.
As an alternative tab hooks may be stitched at regular intervals onto the top webbing.

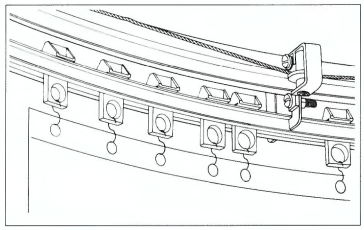



Twinhook
Cat No 900



Tabhook
Cat No 287

Standard pocket

A pocket is stitched or welded (PVC) along the bottom edge of the drape through which a jack chain or 20mm (3/4") OD electrical conduit is inserted. This helps to maintain the original shape of the drape without distortion.

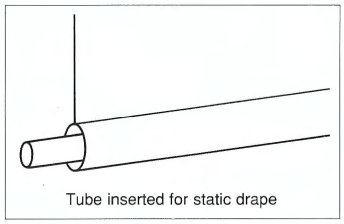

Chain pocket with rubbing strip

A pocket is stitched a few cm above the bottom edge of the drape thus preventing heavy wear on the bottom edge caused by the chain rubbing the material along the floor. This is standard on all tabs unless specified otherwise.

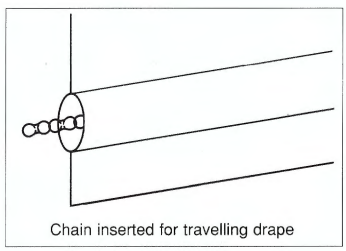

Chains for weighting stage curtains (actual size)

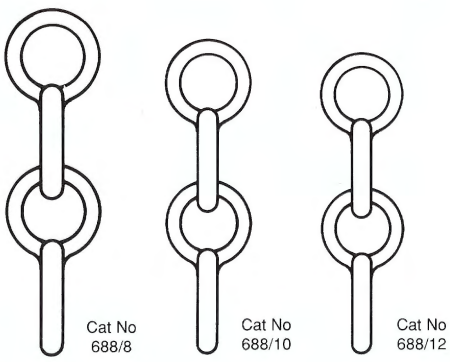

Cat No 688/8

Cat No 688/10

Cat No 688/12

Pocket and cover

Where the drape is required to hang flush with the floor, as are cycloramas in television and video studios, a pocket is stitched to produce a flush fitting apron.

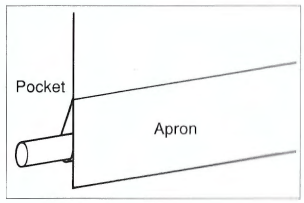

Web Edging

Stitched directly along the edge of the drape, this band of inherently flame retardent webbing produces an effective strengthener which helps prevent the edge distorting and reduces the risk of rips and tears.

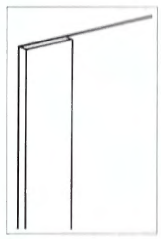

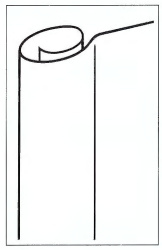

Hem Edging

The material is folded and stitched, or welded (PVC), along the edge.

Materials

Many types of materials are suitable as stage drapes or for covering scenery.

Product and primary use;

Velour: A fabric with deep pile suitable for drapes. Light absorbent and gives a depth and richness to a setting.
Lanvera dimout: An inherently flame retardant man-made fibre in black and a range of standard colours, for drapes and masking.
Bolton twill: A cotton fabric, less expensive than velour, for similar purposes or for masking.
Wool serge: A fabric with excellent light absorption but without the plushness of velour.
Gauze: A loosely woven cotton fabric which is opaque if only front lit, but transparent if lighting is increased behind and the front light removed. Different types are available.
Flax canvas: A linen fabric for backcloths and covering scenery.
Sheeting: A bleached lightweight cotton fabric, cheaper than flax canvas.
Calico: Unbleached sheeting non-durably flame retardant.
All materials except Calico available in either durable or less expensive non- durably flame retardant.
PVC screen material: for front lighting and translucent for rear lighting/effects.
Samples of materials are available on request.

Order Procedures/Sales Enquiries

Please provide a simple sketch/drawing . State the type of material required, the width and drop. Specify the finishes you require - tab hooks, web and tapes or twin hooks and eyes, the type of pocket and type of edge trim - hem or web.

All stage drapes are custom made. Please contact the sales office who will be pleased to assist you with your order, or to arrange a survey.

HARKNESS HALL LIMITED THE GATE STUDIOS STATION ROAD BOREHAM WOOD HERTS WD6 1DQ TEL: 0181 953 9371 / 3611 FAX: 0181 207 3657

Pulley and Hauling Line Arrangements

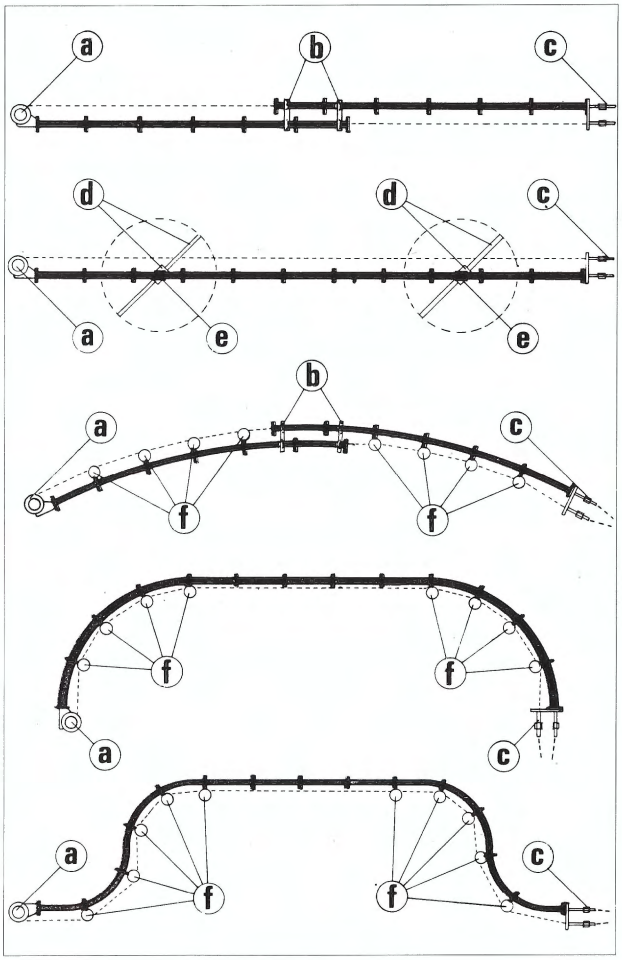

a	Return pulley	A/RP
b	Overlap clip	A/OC
c	Head pulley. A/HP - A/CP	-
d	Swivel arm assembley	382
e	Swivel arm runner carrier	A/SAC
f	Guide pulley	A/GP

Diverter Pulleys

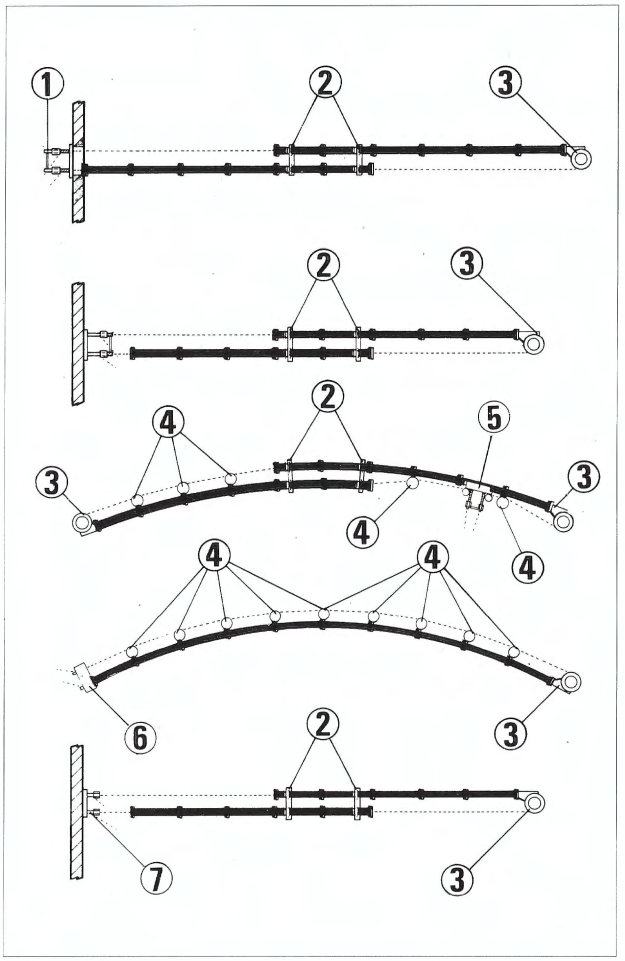

1	Electric controller wall fixing head pulley	A/TWCP
2	Overlap clip	A/OC
3	Return pulley	A/RP
4	Guide pulley	A/GP
5	Upstage unsprung diverter pulley	A/TP
6	Upward drive diverter pulley	A/UDP
7	Handline wall fixing head pulley	A/TWHP

Banjo-End Track Assembly (walk along only)

Suitable for reversible curtains, scenic cloths, cyclorama cloths and masking wings.

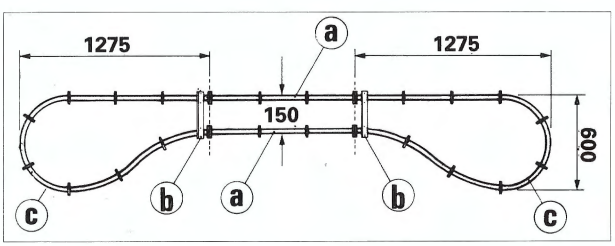

a	Standard Track sections to any length
b	Brace Angles
c	Left and Right Handed Banjo Track Ends

Chains for weighting stage curtains

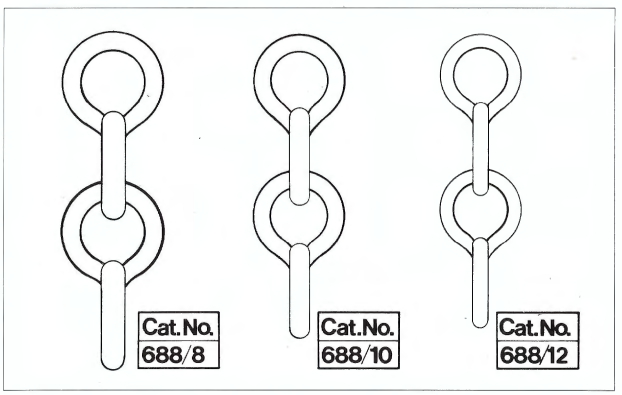

Floor Fixing Handwinch

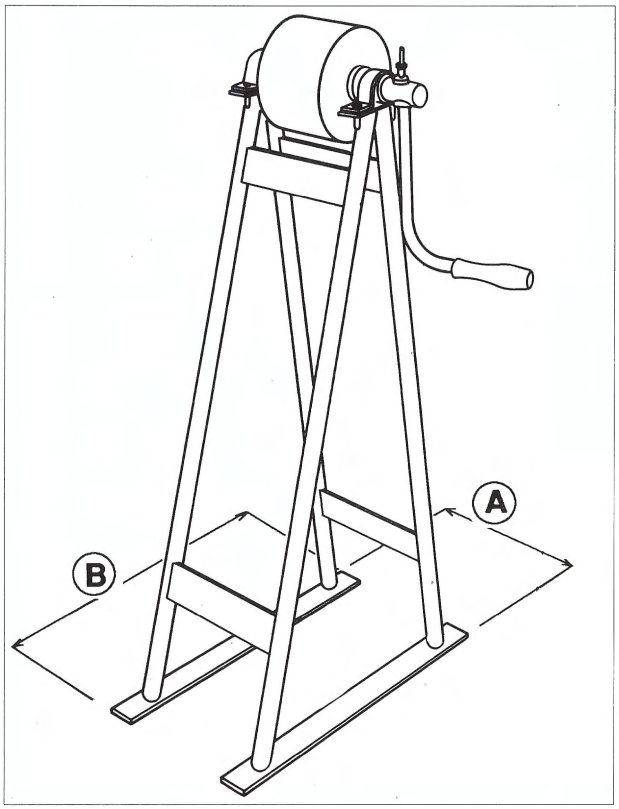

A	230mm	B	450mm

The dimensions given apply to the 200mm floor fixing handwinches only.

Four standard sizes of floor fixing handwinches are available. All are of electronically welded tubular steel or angle construction.

The aluminium winding drum is mounted on self-aligning plummer blocks with graphite and oil impregnated bushes.

Cat. No.	Drum dia.	Maximum travel single track	Maximum travel overlapped track	Cable dia.
251/8N	200mm	8m	16m	3mm
251/8W	200mm	15m	30m	3mm
250/10	250mm	20m	40m	4mm
250/12	300mm	No limit	No limit	4mm

Truck and revolve winches

We are also able to fabricate geared handwinches with locking devices for the operation of revolving stages and stage trucks.

The various types can be used for a multitude of other applications when a spirally wound winch is required.

Wall Fixing Handwinch

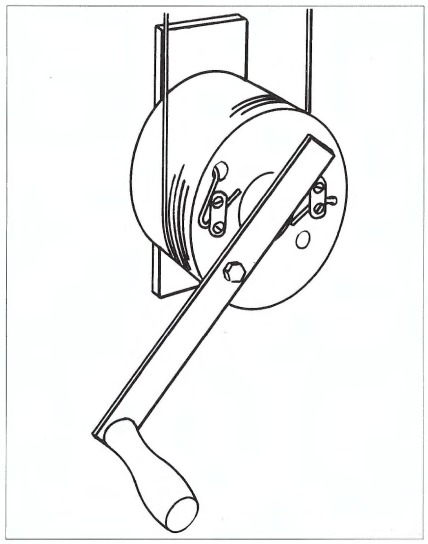

A choice of four standard sizes of wall fixing handwinches are available.

These comprise of an aluminium winding drum with a steel shaft mounting, welded to a steel back plate.

Cat. No.	Drum dia.	Maximum travel single track	Maximum travel overlapped track	Cable dia.
251/8N	200mm	8m	16m	3mm
251/8W	200mm	15m	30m	3mm

100mm, 150mm, 250mm and 300mm dia. handwinches for wall fixing are available - details on request.

Anglia Curtain Controller Wall Fixing Bracket No. 188

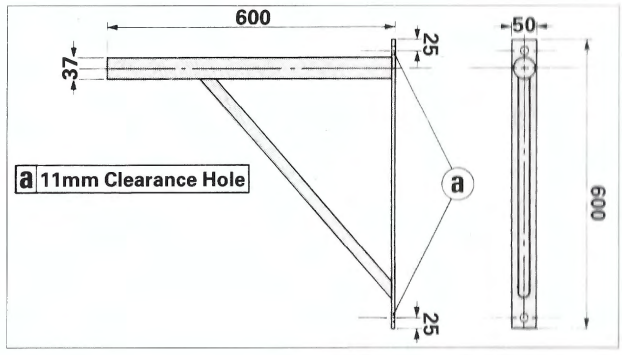

Manufactured from steel and electrically welded, Anglia controller wall fixing brackets are supplied in pairs and include four universal clips (No. 232) for fixing the controller in position on the brackets.

HARKNESS HALL LIMITED THE GATE STUDIOS STATION ROAD BOREHAM WOOD HERTS WD6 1DQ TEL: 0181 953 9371 / 3611 FAX: 0181 207 3657

Pile Wind Winches

Pile Wind Winches have major benifits over standard multi-drum hoists in that the cables are correctly stacked one upon the other preventing uneven winding and 'out of level' barrels.

Pile wind winches are available for electric or manual operation.

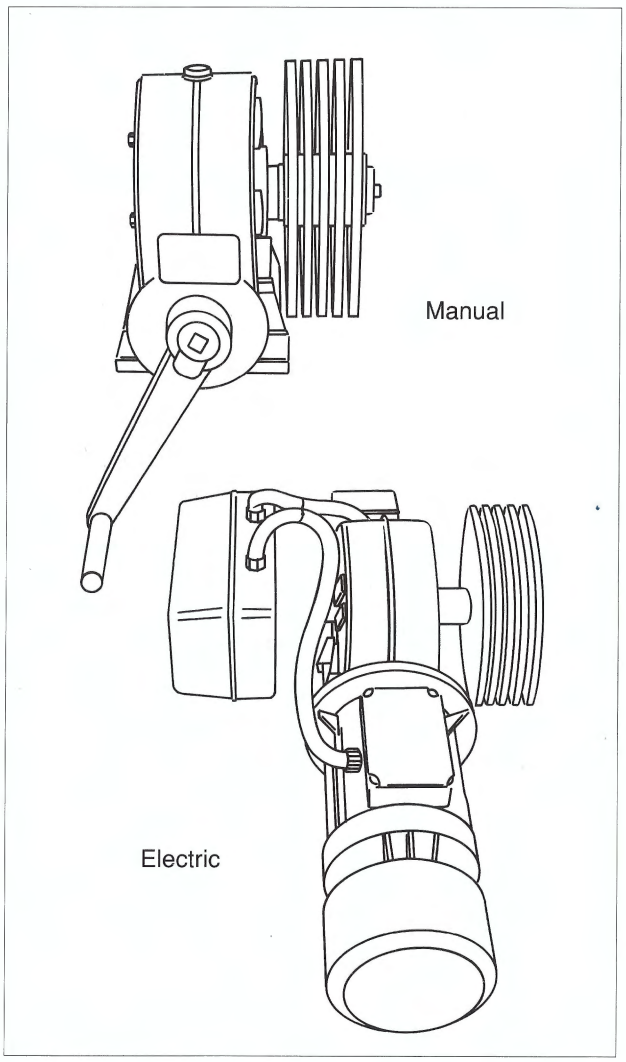

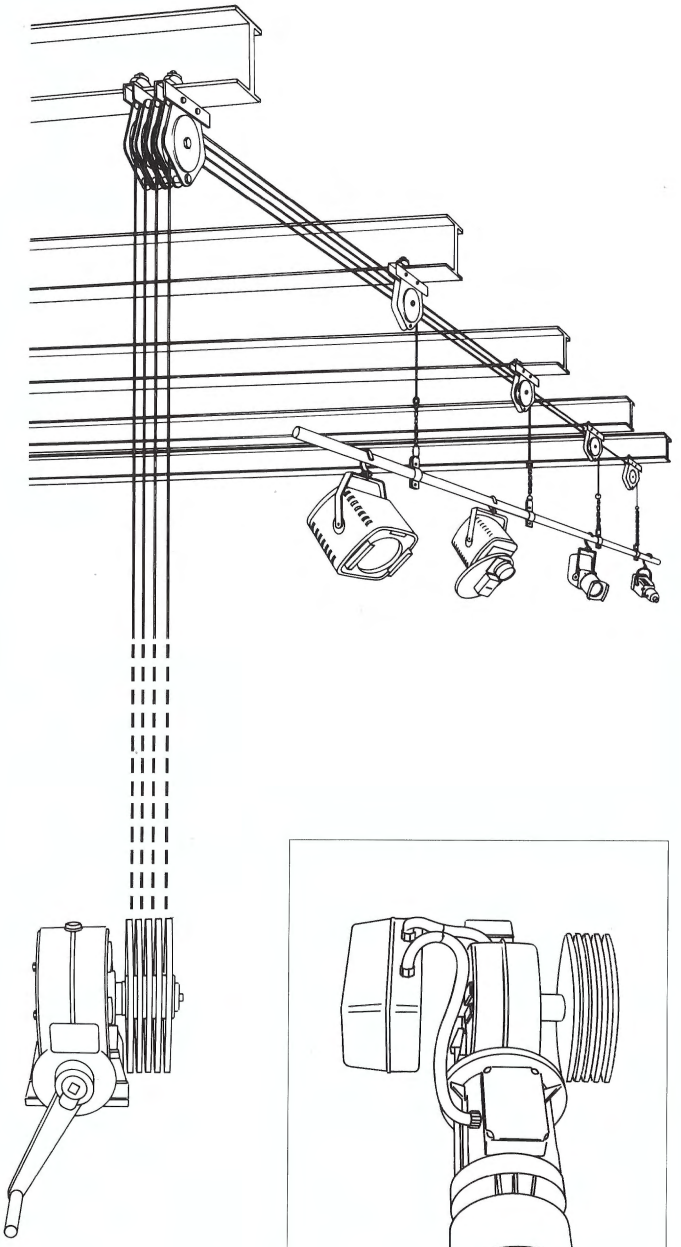

The winch is despatched complete with all hauling lines fitted enabling installation time to be reduced. The 'Halladjust' method of barrel makeoff should be used for quick and easy levelling.

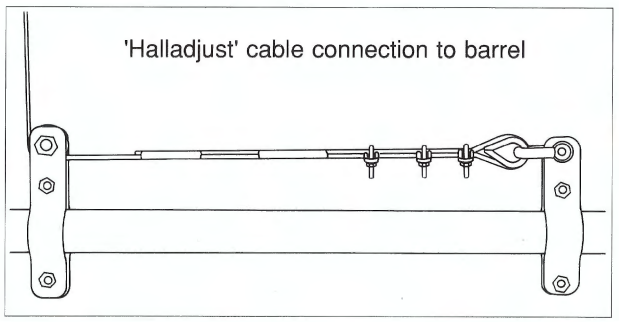

The pile wind winch enables the hoist to be placed on a high level perch or walkway close to the head pulley in situations where a clewed operation is not practical.

All winches come complete with lifting cables fitted to suit maximum travel.

Electric versions can be:

(i) Variable speed/fixed speed.
(ii) Multi preset limit or two limit up-down with intermediates by stop button
(iii) 3 ph or 1 ph supply
(iv) Single purpose built panel to suit several hoists.
(v) Special builds outside normal parameters.

Specifications:

250K SWL Hand or electric
500K SWL Hand or electric
250Kg - 6mm cable - 10m max travel
500Kg - 8mm cable - 8m max travel
2 lines/3 lines/4 lines/5 lines - standard
Additional lines optional.

Anglia Curtain Controller No. 960

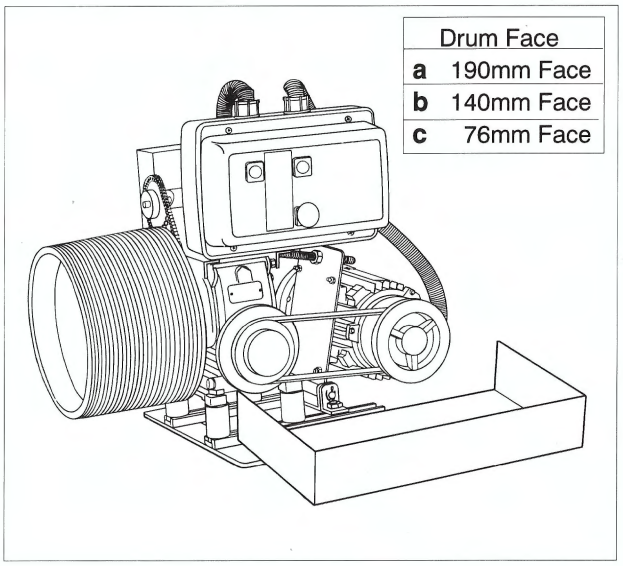

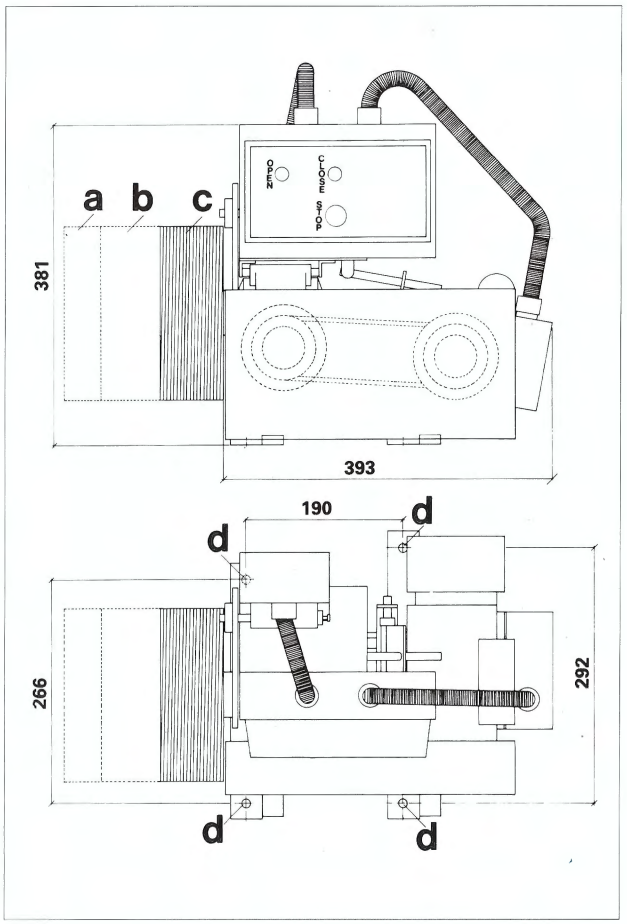

Anglia Curtain Controller

Drum Face	Max. Travel overlapped tracks	Max.Travel single tracks	Phase	KW	Cat. No
76mm	16m	8m	single	.37	A/1
76mm	16m	8m	three	.37	A/3
140mm	30m	15m	single	.37	A/1
140mm	30m	15m	three	.37	A/3
190mm	42m	21m	three	.55	A/3
LARGER SIZES AVAILABLE ON REQUEST					

The Anglia Curtain Controller No. 960 is operated from an A.C. supply and is push button contactor operated. It is fitted with thermal overloads and easily adjusted limit switches. There is a choice of three sizes of winding drum faces available to be used with this controller. These give maximum curtain track length of respectively 8m, 15m, 21m, for single tracks, and 16m, 30m, 42m, for overlapped tracks.

Operating controls and switchgear are mounted to the side of the controller and require only an isolated supply to be connected.

The push button box provides three functions - open, close, and stop. Using these controls it is possible to stop the curtain in any position and reverse them. Using additional remote push button boxes the controlling position may be made from any number of points, it also possible to incorporate additional itermediate limit switches if required. In addition to our standard range we manufacture 'special controllers' to suit individual requirements. We should be pleased to offer details on receipt of the requirements.

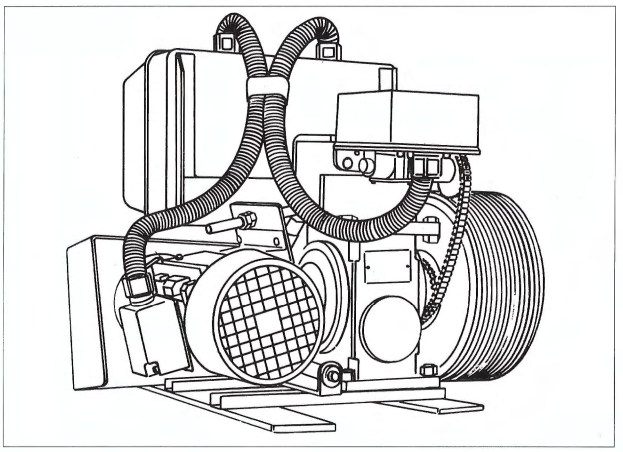

Anglia Curtain Controller Push Button Box No. 191 for Remote Operation

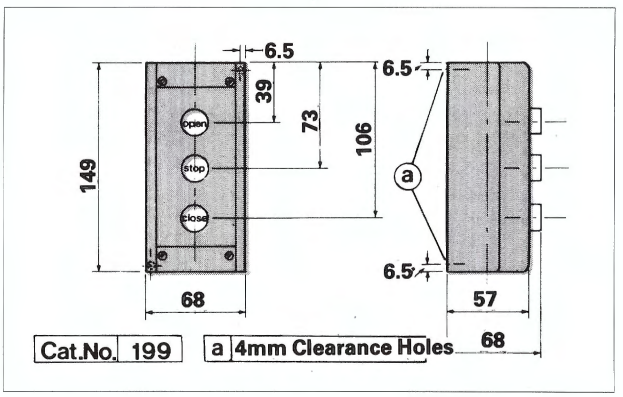

A wall fixing injection moulded plastic unit with three push buttons - open, stop and close. It is possible to stop the curtains in any position using this control unit and reverse them. *These remote units are not supplied with controllers and should be ordered separately.*

Compact Electric Curtain Controller No. 997

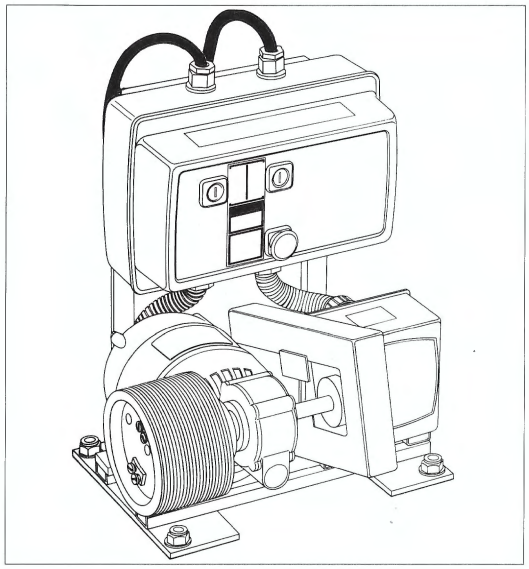

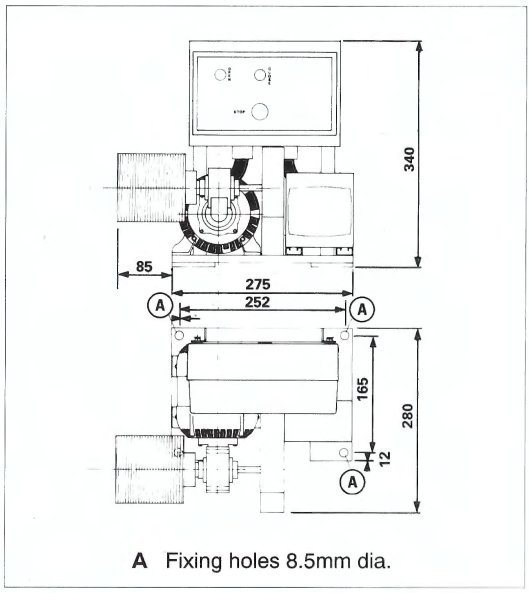

A Fixing holes 8.5mm dia.

The compact Controller No. 997 is designed to operate from an A.C. electrical supply providing standard two position operation, open and close. It may be halted in any position and reversed. The controller incorporates easily adjusted limits. Operating controls and switchgear are mounted to the side of the controller and require only isolated supply to be connected. The 100mm dia winding drum is grooved for 2mm dia cable and is essentially for use with the T400 compact track system. It can operate up to 10 metre overlapped or 5 metre single track assembly. The maximum recommended weight of curtain for use with this controller is 40kilo.

For crematorium use the unit is supplied at a single extreme slow speed to match the committal reading time. Finally should you require precise stop-start positions the unit can be manufactured with an integral electro-magnetic brake.

The No. 997 controller can also be supplied with preset multistop facility, particularly useful for small screen masking systems.

Infinitely variable speed operation is also available opening up the possibility for big stage presentations in the smaller club or school venue.

Type 962 Curtain Controller

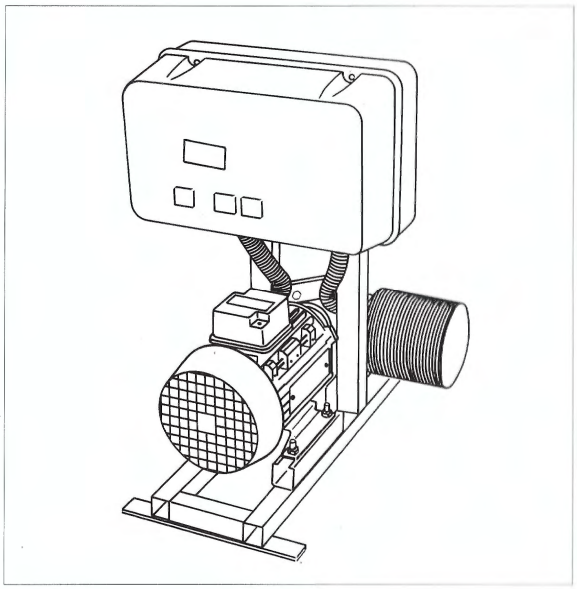

OTHER TYPES OF CURTAIN CONTROLLERS AND HOISTS UP TO 1 TONNE CAPACITY ARE AVAILABLE. We would be pleased to supply any special build motor unit for any application.

500 Kilo S.W.L. Hoist

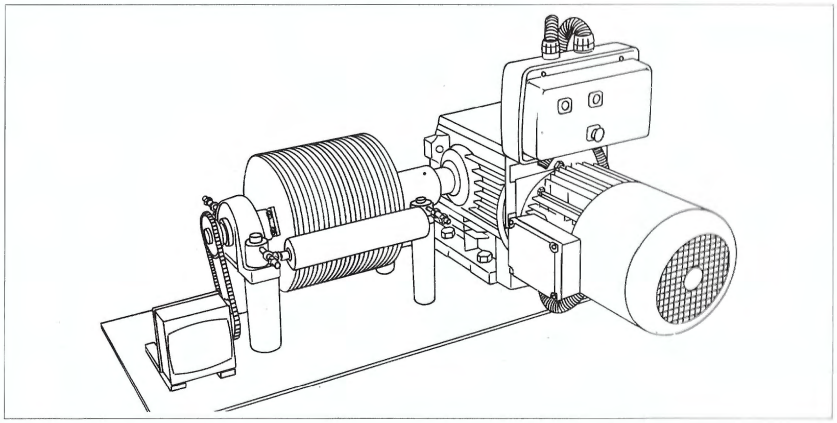

HARKNESS HALL LIMITED THE GATE STUDIOS STATION ROAD BOREHAM WOOD HERTS WD6 1DQ TEL: 0181 953 9371 / 3611 FAX: 0181 207 3657

Border Barrel Sets

Masking Borders on multi-purpose and cinema stages are usually suspended on tubular steel barrels hung on cables or hand ropes.

(1) Shows the barrel hung on hand ropes.

(2) Shows the barrel hung on cables with a single hauling rope.

The use of cable set (2) is more suitable for a border in a permanent position. Cables once "deaded off" are not affected by moisture which may be the case if hand rope sets are used.

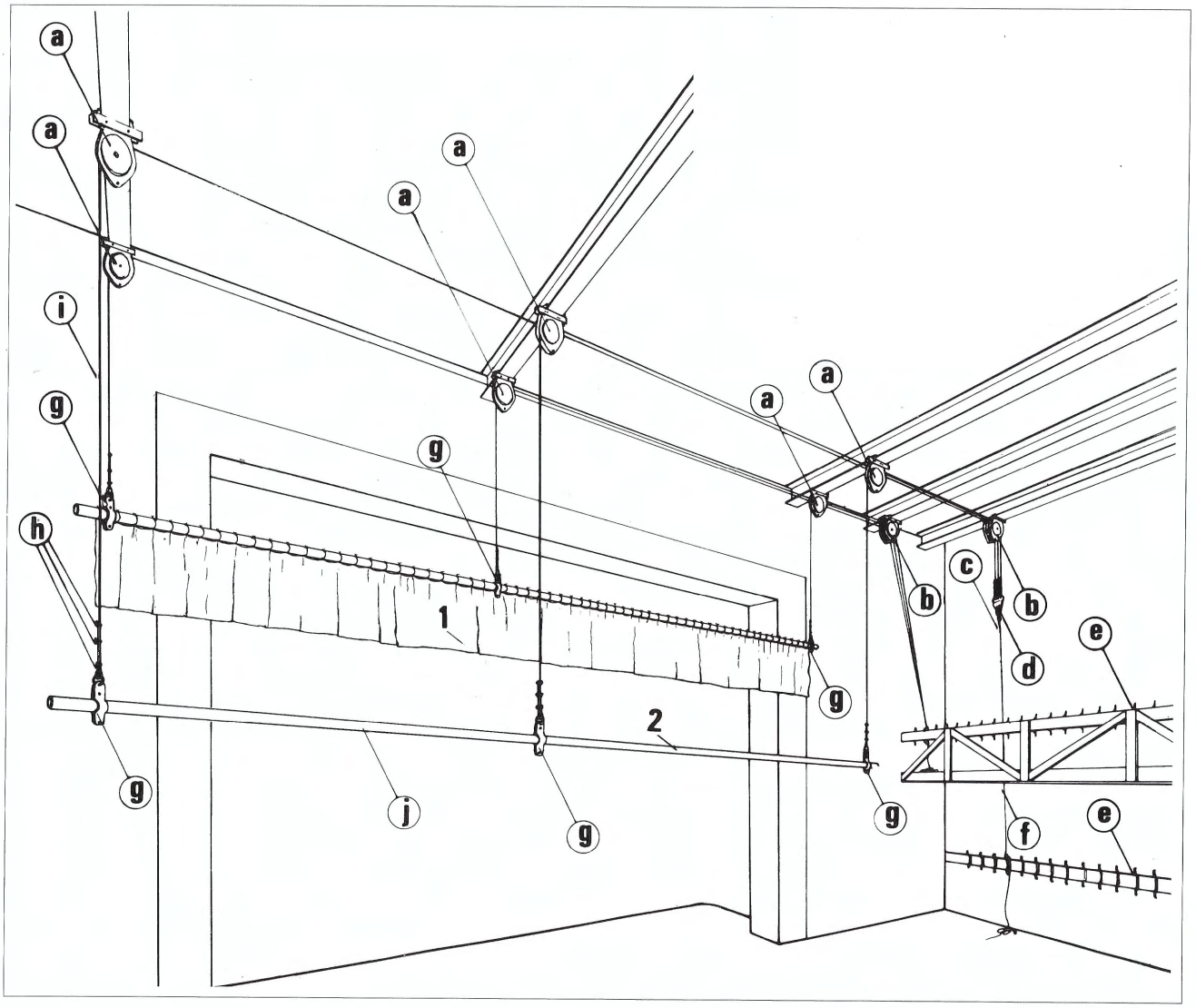

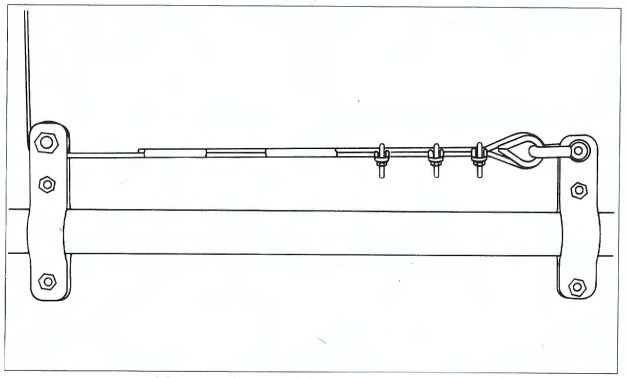

Alternative cable connection to barrel giving simple level adjustments.

TYPICAL COMPONENTS LIST

a	Girder fixing pulley-single	184
b	Girder fixing pulley-treble	184
c	Hauling rope tied off	-
d	250K threeway swivel clew	371
e	Flyrail cleat	135
f	Hauling rope	341
g	Hanging ring	593
h	Cable grips	640
i	Suspension cable	336
j	Barrel	642

Size and type of each item depends upon individual requirement.

Scenery Hand Rope Sets

Scenery hand rope sets provide a quick and simple means of raising and lowering light scenery and masking borders, which makes it possible to change scenes fast and efficiently. This is why our hand rope sets are installed in almost every theatre and Community Hall throughtout the country.

We recommend the installation of a double cleat rail in order to provide a "lowering dead" as well as top cleat for a "tie off". And also the use of the No. 181 grid pulley for timber grids as illustrated. Other pulley arrangements are possible however.

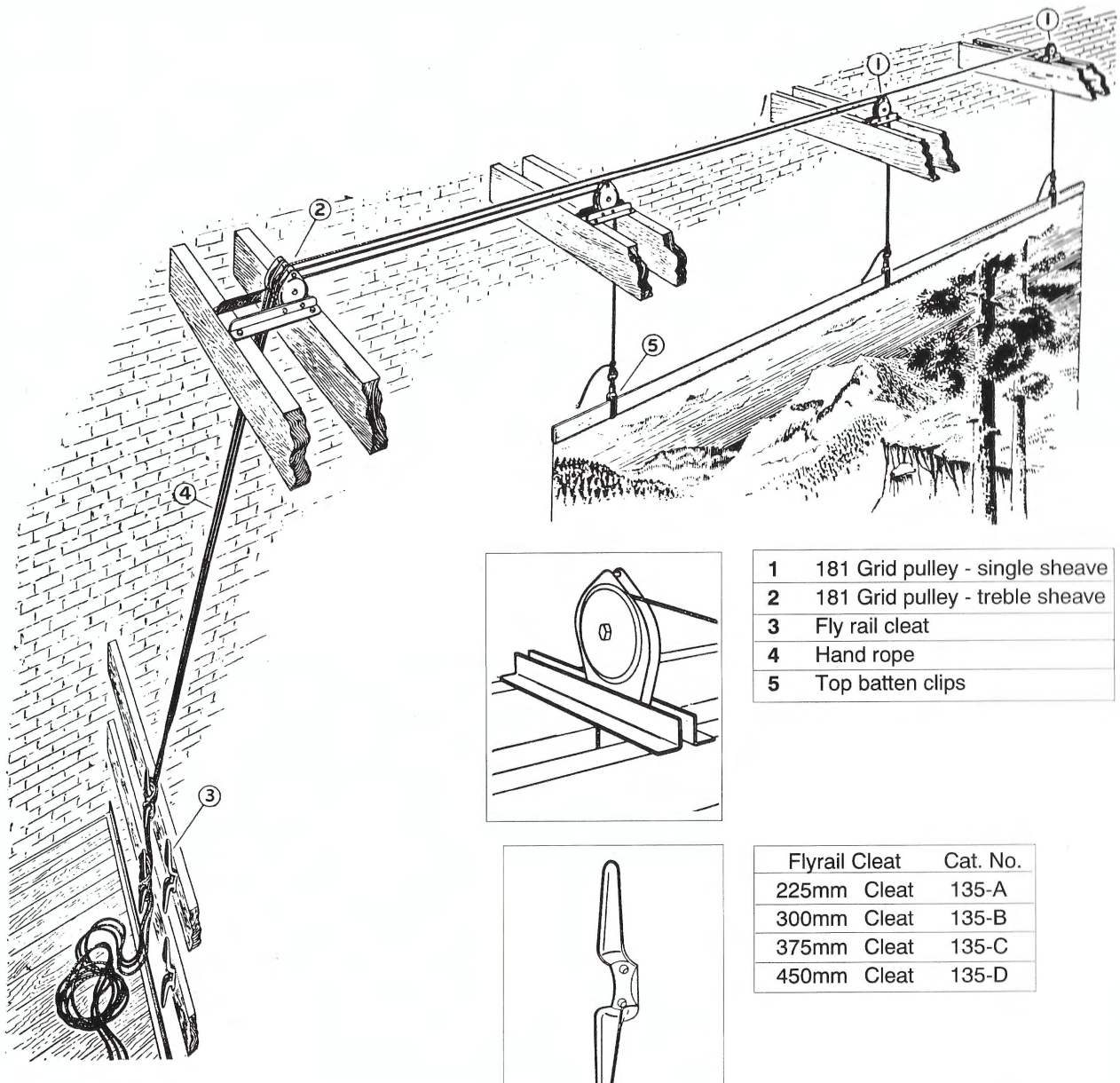

1	181 Grid pulley - single sheave
2	181 Grid pulley - treble sheave
3	Fly rail cleat
4	Hand rope
5	Top batten clips

Flyrail Cleat	Cat. No.
225mm Cleat	135-A
300mm Cleat	135-B
375mm Cleat	135-C
450mm Cleat	135-D

Steel Wire Rope S.W.L. and Accessories

Cable Size	Cable Cat.No.	S.W.L.	Suitable Grip Cat.No.	Suitable Shackle Cat.No.	Suitable Thimble Cat.No.
2mm	336/2mm	30 kilo	N/A	592/6mm	653/3mm
3mm	336/3mm	55 kilo	640/3mm	592/6mm	653/3mm
4mm	336/4mm	90 kilo	640/4-5mm	592/6mm	625/4-5mm
5mm	336/5mm	115 kilo	640/4-5mm	592/10mm	625/4-5mm
6mm	336/6mm	180 kilo	640/6mm	592/10mm	625/6-7mm
7mm	336/7mm	235 Kilo	640/7mm	592/12mm	625/6-7mm
8mm	316/8mm	545 kilo	640/8-9mm	592/12mm	625/8mm
9mm	316/9mm	815 kilo	640/8-9mm	592/16mm	625/9mm

HARKNESS HALL LIMITED THE GATE STUDIOS STATION ROAD BOREHAM WOOD HERTS WD6 1DQ TEL: 0181 953 9371 / 3611 FAX: 0181 207 3657

Stage Lighting Suspension Equipment

All stage lighting equipment should be provided with raise and lower suspension gear. The most satisfactory method of doing this is by the use of a counterweight set, but a self sustaining hoist will be found to be a satisfactory substitute.

TYPICAL COMPONENTS LIST

a	Cable grips	640
b	Galvanised thimble 5mm	625
c	Galvanised shackle "D" shape 10mm	592
d	Bridle chain	761
e	Hanging ring 37mm gas (48mm o.d.)	593
f	Suspension cable 5m/m	336
g	Barrel 37mm gas (48mm o.d.)	641
h	Bridle ring	-
i	Girder fixing head pulley - fourway	184
j	Girder fixing pulley - single	184
k	Machined gear single drum hoist	928
l	Fourway swivel clew	374

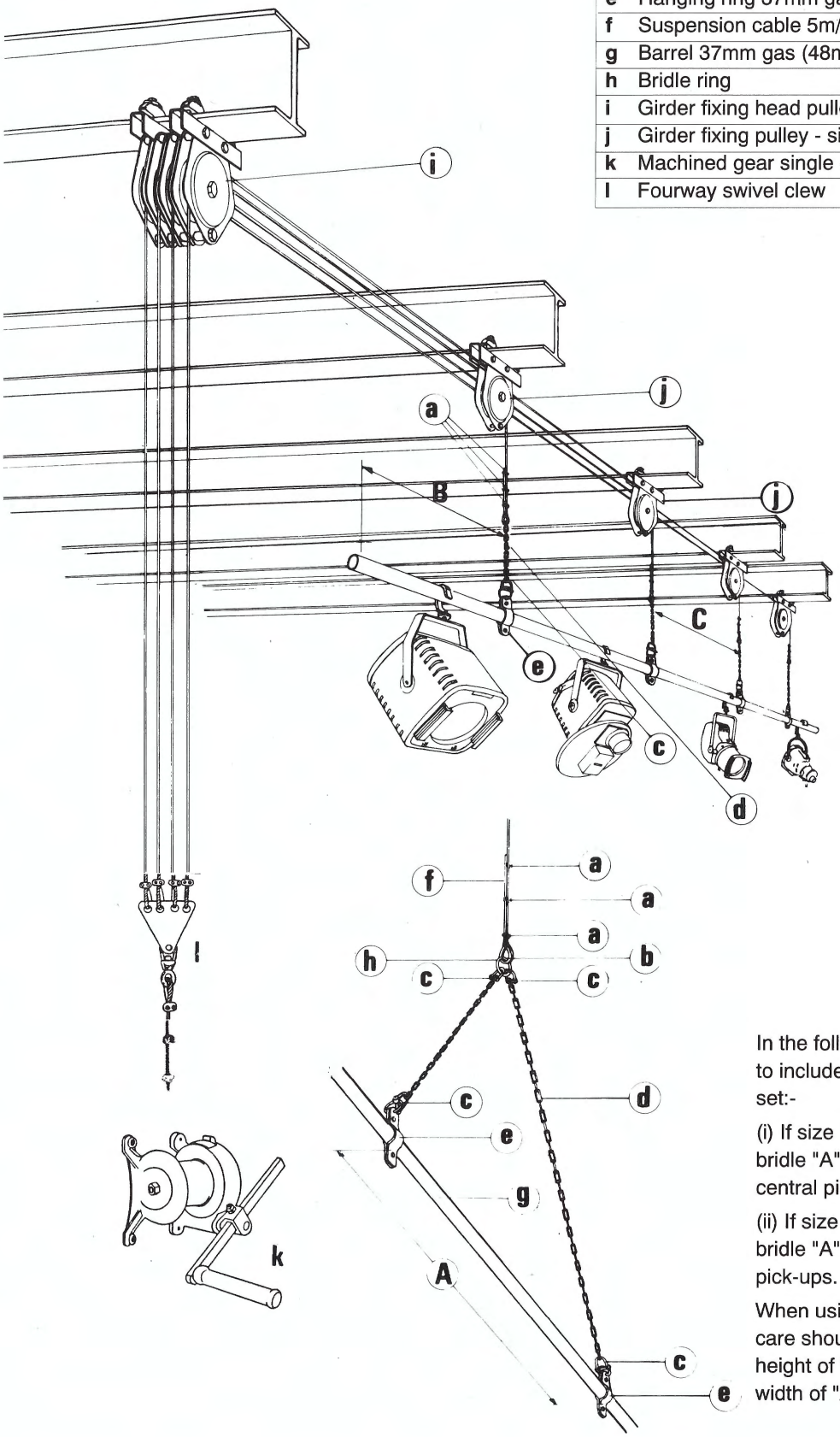

In the following instance it is advisable to include chain-bridles in a suspension set:-

(i) If size "C" exceeds 5m then a chain bridle "A" should be included in the central pick-ups.

(ii) If size "B" exceeds 1.50m then chain bridle "A" should be included in the end pick-ups.

When using bridles on suspension sets care should be taken to see that the height of the bridle is at least half the width of "A".

Pulleys

These pulleys have been designed for use with scenery hand lines, border barrel sets and stage lighting suspension sets and are provided with self lubricating bushes. They are manufactured in various sizes, as detailed, with single, double, treble, fourway and fiveway assemblies of each.

Special pulleys can be made up with any number of sheaves on receipt of details.

No. 307 and no. 308 fit up pulleys are provided with "U" bolt fixings which enables the No. 307 to be clamped in position at right angles to the supporting tube, and the No. 308 to be clamped parallel to the supporting tube, and clamp to either 37mm o.d. steel tube or 37mm gas barrel (48mm o.d.) and 50mm gas barrel (60mm o.d.). Made in 75mm, 100mm and 150mm sheave sizes.

Maximum recommended sizes for handropes and cables

37mm Sheaves		2mm dia. cable
50mm sheaves	10mm dia. rope	2mm dia. cable
75mm sheaves	12mm dia. rope	3mm dia. cable
100mm sheaves	16mm dia. rope	4mm dia. cable
150mm sheaves	18mm dia. rope	7mm dia. cable

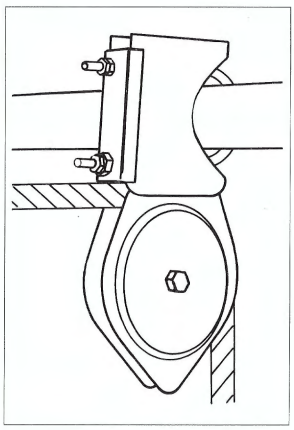

Fit-Up Pulley Cat. No. 307

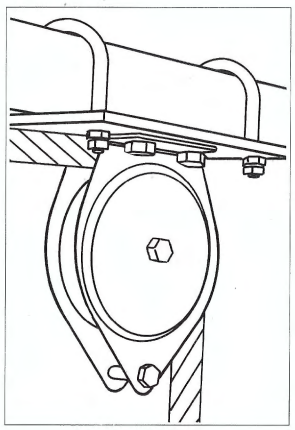

Fit-Up Pulley Cat. No. 308

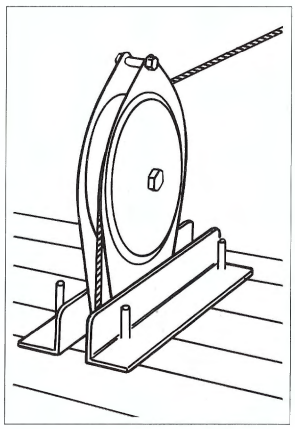

Grid Pulleys with Hookbolts Cat. No. 182

These pulleys are supplied with four hookbolts as means of fixing to steel channel grids.
Made in 75mm, 100mm and 150mm sheave sizes

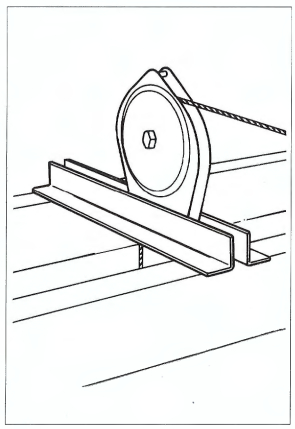

Grid Pulleys with 425mm Angles Cat No.181/17
275mm Angles Cat No.181/11

These pulleys are available mounted on either 275mm or 425mm fixing angles.
Made in 75mm, 100mm and 150mm sheave sizes.

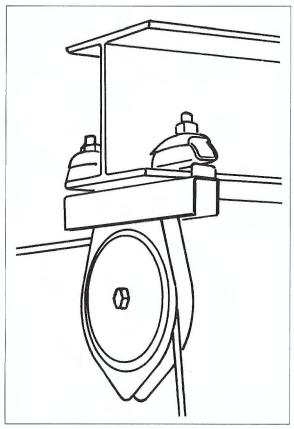

Girder Fixing Pulley Cat. No.184

The pulley arrangement includes girder-dogs which clip to the flange of a rolled steel joist; these clamps are adjustable for giders from 75mm to 150mm. For rolled steel joist sizes of less than 75mm but more than 150mm flange size special pulleys of the same design can be made to order on receipt of details of the flange size.
Made in 75mm, 100mm and 150mm sheave sizes.

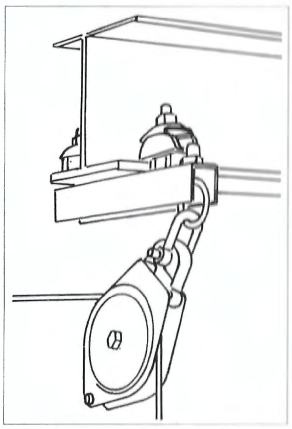

Awning Pulleys Cat. No.245

The awning pulley solves many stage rigging problems, particularly where the supporting beams or girders are not at right angles to the proscenium or horizontal.
Pulleys may be shackled to either a No.764 eyebolt or for pulleys up to 75mm to a No.338 Coach eye.
Made in 37mm, 50mm, 75mm and 100mm sheave sizes.

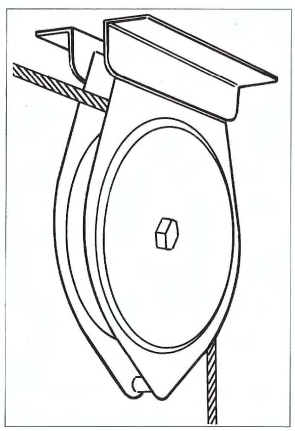

Timber or Ceiling Fixing Pulley Cat.No.183

Positioning of th pulley may be above or below a ceiling or mounted on a wall.
Made in 75mm, 100mm and 150mm sheave sizes.

HARKNESS HALL LIMITED THE GATE STUDIOS STATION ROAD BOREHAM WOOD HERTS WD6 1DQ TEL: 0181 953 9371 / 3611 FAX: 0181 207 3657

Pulleys

These pulleys have been designed for general stage use and are frequently used in the following situations:- curtain tracks cables, scenery track lines, festoon lines, safety curtain release runs and blind operating cables.

The sheaves are provided with self lubricating bushes and are designed to provide long and trouble free service.

Pulleys are manufactured with either 37mm, 50mm or 75mm sheaves and in single, double, treble and fourway assemblies.

Special pulleys can be made up with any number of sheaves on receipt of details.

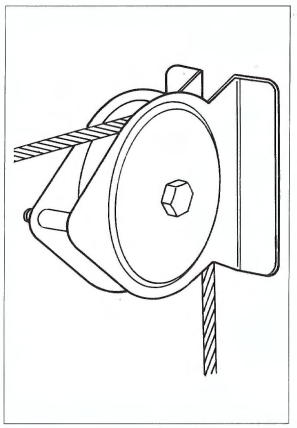

Upright Guide Pulley Cat. No.243

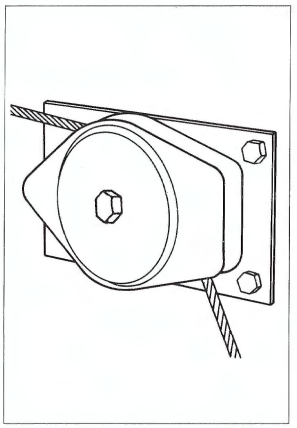

Slide Fixing Guide Pulley Cat. No.244

No. 928 Machined Gear Hoist

The No. 928 Machined Gear Hoist has a standard safe working load of 250 kilo. It incorporates a totally enclosed drive with hardened worm shaft running through an oil bath. The crank handle is absolutely safe against recoiling and it's cranking radius is adjustable. The self locking friction brake secures the load at any height, and drum freewheeling is not possible. It can be wall or base mounted.
The unit is also available with 500 or 1000 kilo S.W.L. capacity.

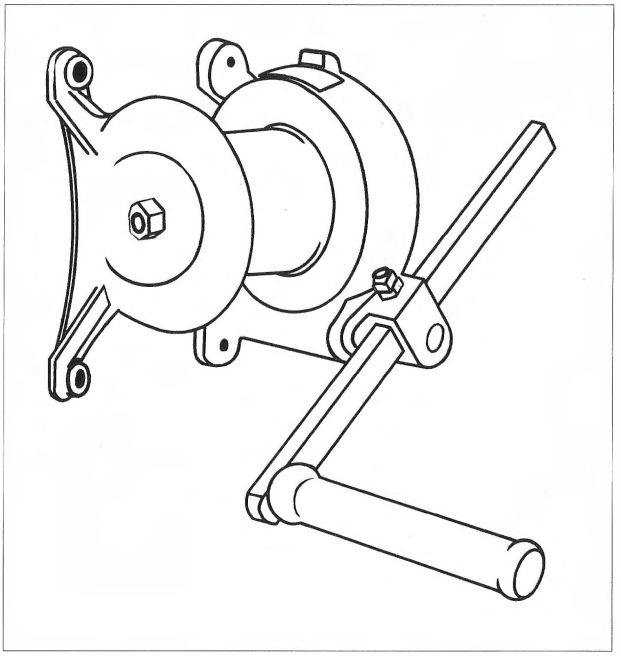

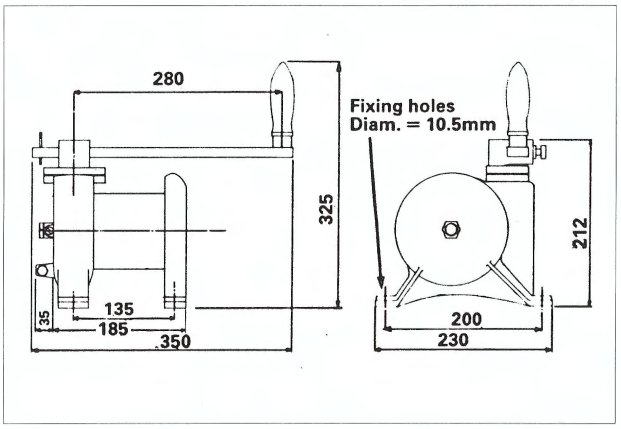

Swivel Clew 250 kg Four-Way

The No. 374 250 kg fourway swivel clew is designed to allow one hauling cable to be attached to four suspension cables. The swivel clew is supplied complete with thimbles.
No. 371 250 kg threeway swivel clew, and No. 377 250 kg fiveway clew (not illustrated) are also readily available.
Additionally, 500 kg and 1000 kg threeway, fourway and fiveway swivel clews are manufactured.

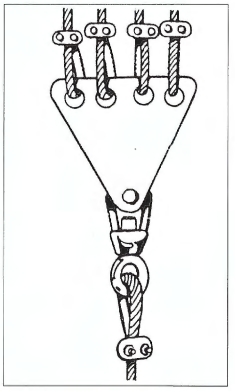

Sundry Accessories

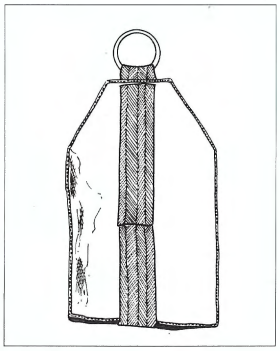

Sandbag 300mm x 200mm

Sandbags are manufactured from durable canvas and are supplied unfilled.

Cat. No. 619

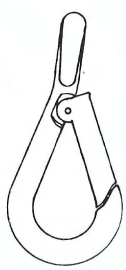

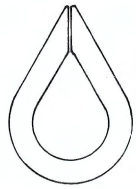

Thimble
3mm, 4-5mm, 6-7mm, 8mm, 9mm.

Cat. No. 625

Tinned Spring Hook 87mm

Cat. No. 691

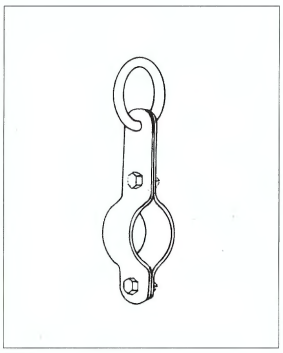

Hanging ring

For 37mm o.d. tube

For 48mm o.d. tube

For 60mm o.d. tube

Cat. No. 593

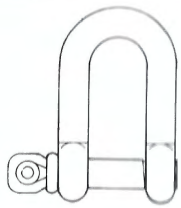

Shackle
6mm, 10mm, 12mm.

Cat. No. 592

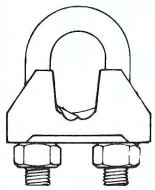

Cable Grips
3mm, 4-5mm, 6mm, 7mm, 8-9mm, 12mm.

Cat.No. 640

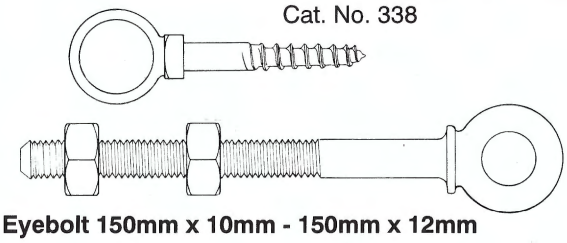

Coach Eye 62mm x 10mm

Cat. No. 338

Eyebolt 150mm x 10mm - 150mm x 12mm

Cat. No. 764

Strainer
125 x 8mm, 150 x 10mm

Cat. No. 339

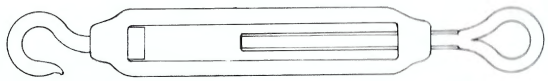

Strainers are used for tensioning or making fine adjustments to cables.

Barrel Sling

Cat. No. 760A

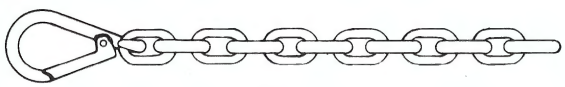

1m overall length with 90mm tinned hook

Barrel slings are useful for quickly and easily attaching scenery, curtain tracks and props to counterweight barrels.

"U" Bolts and plates for clamping tubes at 90°

Cat. No. 348

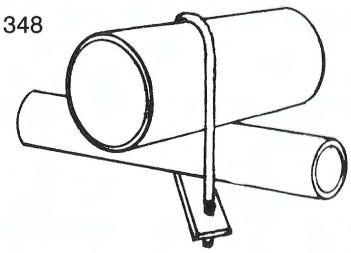

To suit any combination of stock size barrels

Barrel Sling

Cat. No. 760B

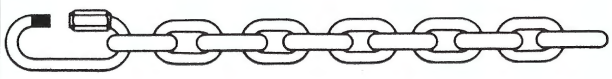

1m overall length with quicklink.

Tested to 250kg

Similar to 760A above but uses tested components

Hookbolt 10mm

Cat. No. 347

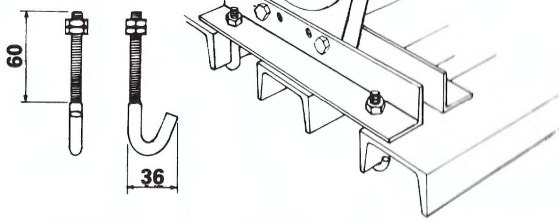

HARKNESS HALL LIMITED THE GATE STUDIOS STATION ROAD BOREHAM WOOD HERTS WD6 1DQ TEL: 0181 953 9371 / 3611 FAX: 0181 207 3657

Sundry Accessories

London Pattern Pulley Blocks

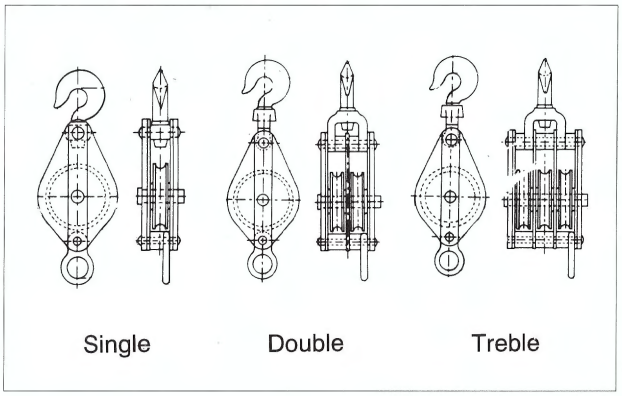

Single Double Treble

Gin Blocks

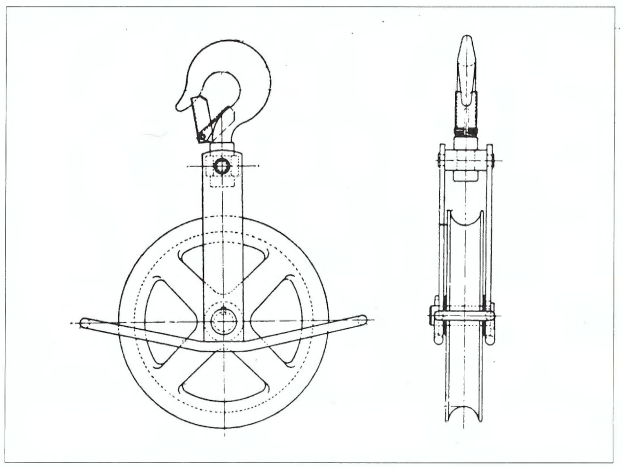

Tirfors

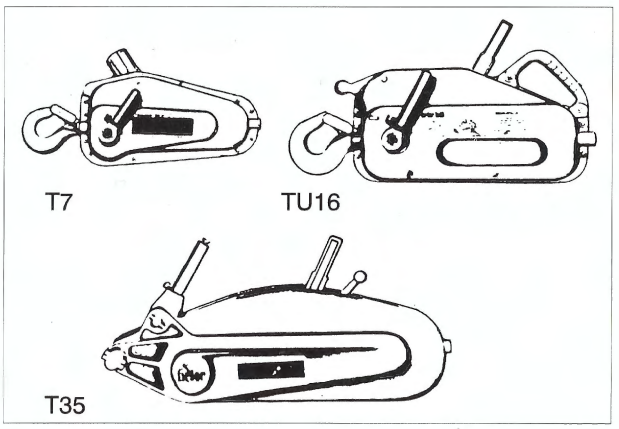

ALL SUPPLIED IN VARIOUS SIZES AND RATINGS - ALL PROVIDED WITH FULL TEST CERTIFICATES.

Webbing Slings (Spansets)

Type A Single Thickness Webb

Width mm	Safe Working Load tonnes
50	1.00
75	1.50
100	2.00
150	3.00
225	4.50
300	6.00

Type B Double Thickness Webb

Width mm	Safe Working Load tonnes
50	2.00
75	3.00
100	4.00
150	6.00
225	9.00
300	12.00

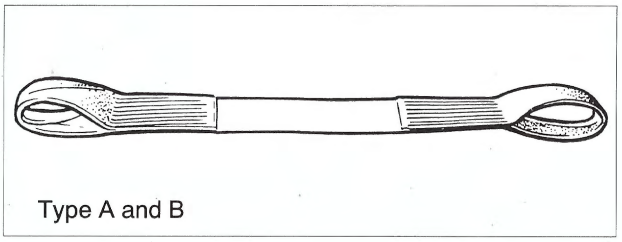

Type A and B

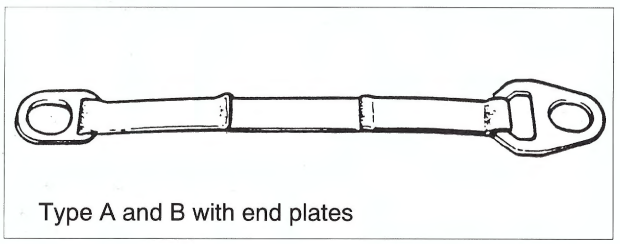

Type A and B with end plates

Type C Endless

Width mm	Safe Working Load tonnes
50	2.00
75	3.00
100	4.00
150	6.00

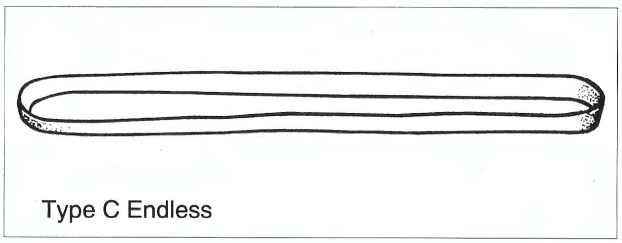

Type C Endless

Sundry Accessories

Cable and Wire Rope Cutters

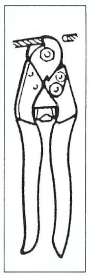

Felco C7
for hard wire
and wire rope

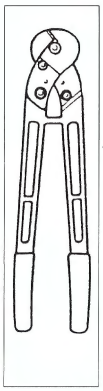

Felco C12
for wire rope
and hard wire

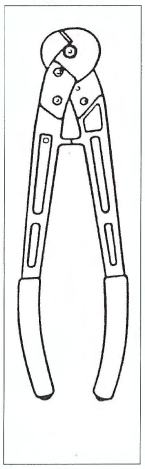

Felco C16 for
wire rope and
hard wire
Felco 16E for
electric cable Ø

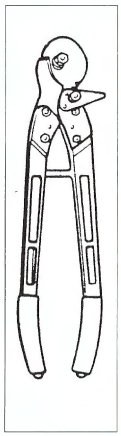

With powerful
force
transmission
Felco C108
for hard wire
rope and wire

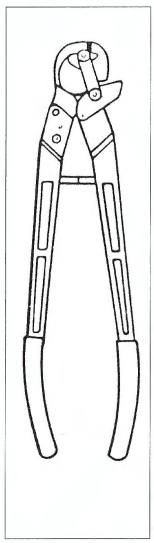

With powerful force
transmission
Felco C112
for hard wire rope
and wire

Cutting Capacities in mm Ø

Type of material	C7	C12	C16	C16E	C108	C112
Mild steel strands	7	12	16	16	8	12,7
High tensile steel strands,resistance 160kg/mm²	5	8	14	10	8	12,7
Pre-stressing strand resistance 190kg/mm²	4	6	7		8	12,7
Extra tough wire ropes and strands resistance 210kg/mm²	3	5	6		8	12,7
Electric cables of copper, aluminium and steel-cored aluminium	7	12	14	14	8	12
Aluminium or copper rods	5	10	14	14	8	12
Steel rods, resistance 60kg/mm2	4	8	10	10	8	12
Tempered spring wire	2,5	4	5		6	8
Length in cm	19	50	63	63	56	73
Weight in kg	0,270	1,500	2,300	2,300	1,950	3,600

Internally Wired Bars

The use of internally wired bars (IWB's) in fixed installations is necessary for safety reasons, as trailing cables are no longer acceptable.
IWB's are manufactured to individual requirements and can incorporate a variety of different socket boxes.
Please advise type and size required.

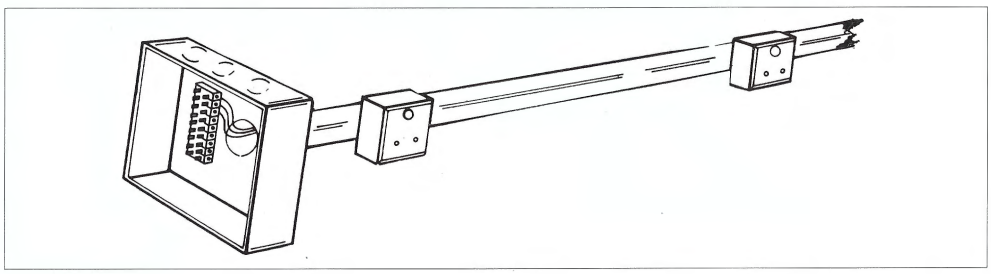

Internally wired bars are made of 48mm OD barrel and have securely fitted robust sockets. Wiring terminals in a metal box at one end of the bar. Standard versions terminate into connector blocks, alternatively multipole connector sockets can be fitted to the box.

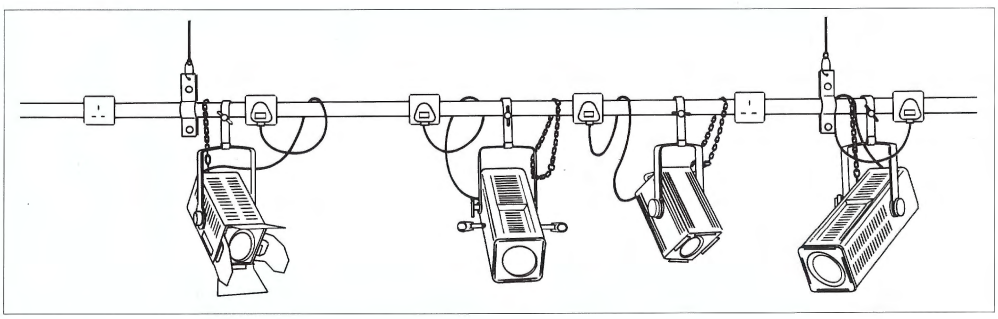

Typical Internally Wired Bar in use

HARKNESS HALL LIMITED THE GATE STUDIOS STATION ROAD BOREHAM WOOD HERTS WD6 1DQ TEL: 0181 953 9371 / 3611 FAX: 0181 207 3657

Scenery Fittings

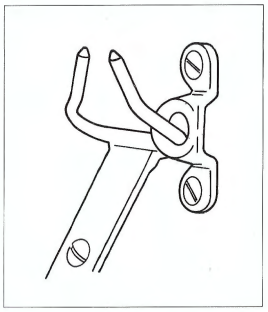

Brace Eye Cat. No. 13
Designed to hold the extension brace to the rear surface of a scenery flat.
Material: Malleable iron.
Fixing: No. 8 Wood Screws

Extension Brace
Cat. No. 134
Used to support scenery flats.
Material: Kiln dried timber with mild steel fittings.

134.2	Extension Brace, Extending to 2 m
134.3	Extension Brace, Extending to 3 m
134.4	Extension Brace, Extending to 4 m

Fixing:

Upper - Brace Eye	No. 13
Lower - Stage Screw	No. 22
Brace Weight	No. 860

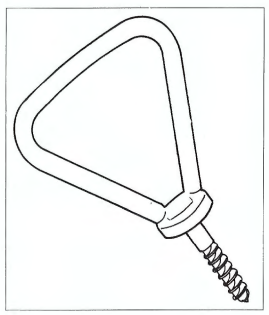

Stage Screw Cat. No. 22
An alternative lower fixing for the extending brace.
Material: Mild steel

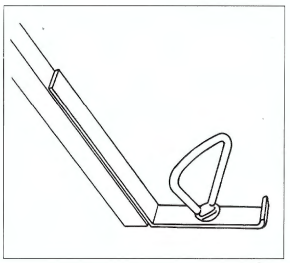

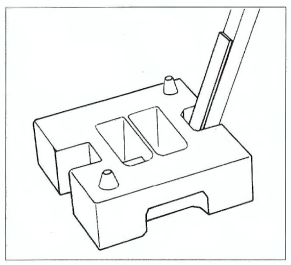

Brace Weight Cat. No. 860
15 kilo to hold no. 134 extending brace in position.
Material: Cast iron.

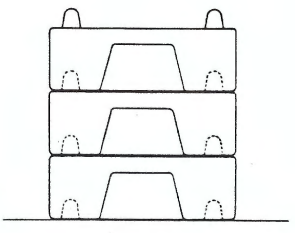

Designed with interlocking spigots for stacking.

Pelmet Clips and Sockets

These fittings provide a simple and quick means of attaching and removing shelves, pictures etc. from scenery flats.
Material: Mild steel.
Fixing: No. 8 25mm C.S.K. Wood Screws.

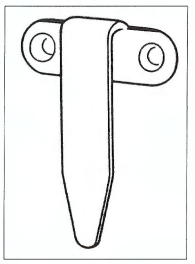

Hook Iron
Cat. No. 221

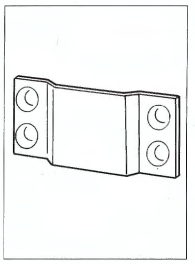

Socket
Cat. No. 222

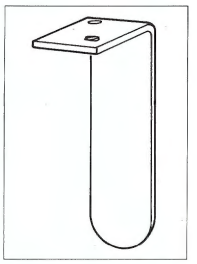

"L" Iron
Cat. No. 290

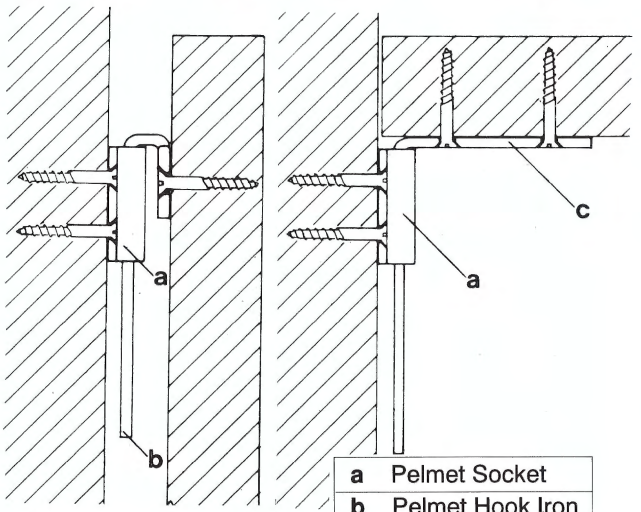

a	Pelmet Socket
b	Pelmet Hook Iron
c	Pelmet "L" Iron

Extension Fittings

A vertical fitting used to flush join two scenery flats.
Material: Mild steel.
Fixing: Socket - No. 8 25mm C.S.K. wood screws
Plug - No. 8 32mm C.S.K. wood screws

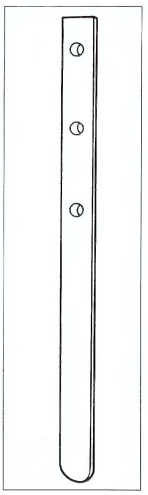

Extension Plug Cat. No. 82A

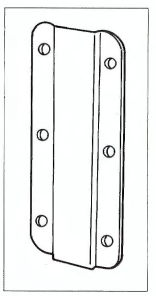

Extension Socket
Cat. No. 82B

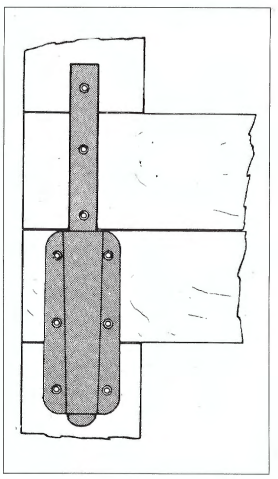

Scenery Fittings

Steel Backflaps
Cat. No. 602
A general purpose 50mm
hinge for scenery.
Material: Mild steel
Fixing: No. 8 C.S.K. wood screws.

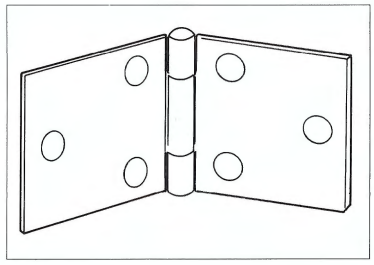

Loose Pin Hinge Cat. No. 603
Loose pin hinges provide a fast and simple means of separating scenery flats.
Material: Mild steel
Fixing: No. 8 C.S.K. wood screws.

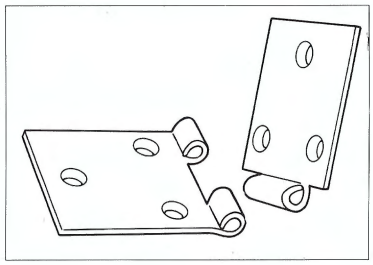

Hinges are supplied in pairs (4 flaps) without pins.

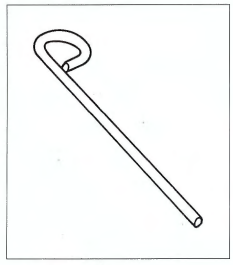

Hinge Pin
(Loose Looped)
Cat. No. 139

Single Action Spring Hinge To Open
Cat. No. 68A
To hold light scenery doors open.
Material: Mild steel.
Fixing: No. 8 C.S.K. wood screws.

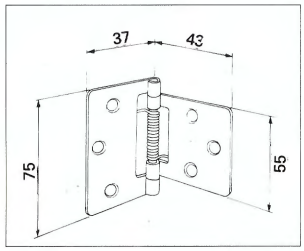

Single Action Spring Hinge To Close
Cat. No. 68B
To hold light scenery doors closed.
Material: Mild steel.
Fixing: No. 8 C.S.K. wood screws.

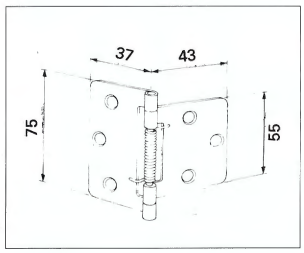

Double Action Spring Hinge.
Cat. No. 67
To hold light scenery doors in the closed position but allow them to swing in either direction.
Material: Mild Steel
Fixing: No. 8 C.S.K. wood screws.

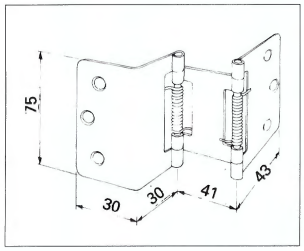

Rubber Tyred Castor
Cat. No. 631
A general purpose swivelling castor.
Material: Cadmium plated mild steel with rubber tyred wheel.



Fixing:
50mm 6mm Clearance Hole
52mm 6mm Clearance Hole
75mm 10mm Clearance Hole

Cat. No.	
631-A	Rubber Tyred Castor 50mm Wheel
631-B	Rubber Tyred Castor 75mm Wheel.
631-C	Rubber Tyred Castor 100mm Wheel.

Doorstop
Cat. No. 11
A simple and inexpensive door jamb for scenery.
Material: Mild steel
Fixing: No. 8 C.S.K. wood screws.

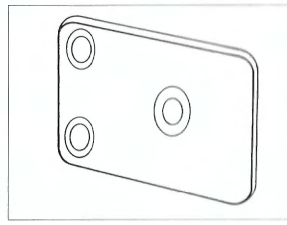

Jointing Plate
Cat. No. 15
Used where it is necessary to have two surfaces butted flush together but allowing simple separation.
Material: Mild steel.
Fixing: No. 8 C.S.K. wood screws.

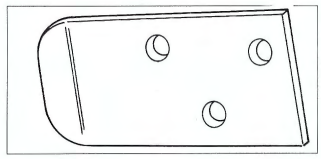

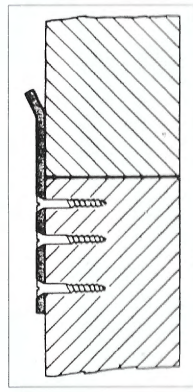

Grummet
Cat. No. 274
To hold the knotted end of lashing line on scenery flats.
Material: Mild steel.
Fixing: 2 x 5mm dia. Round Head Machine Screws and Nuts.
2 x No. 8 25mm C.S.K. wood screws.

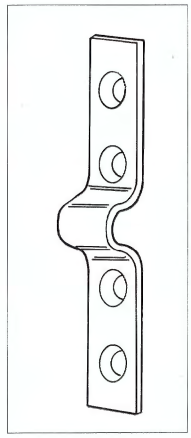

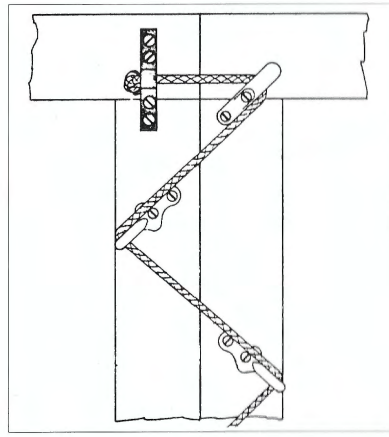

HARKNESS HALL LIMITED THE GATE STUDIOS STATION ROAD BOREHAM WOOD HERTS WD6 1DQ TEL: 0181 953 9371 / 3611 FAX: 0181 207 3657

Scenery Fittings

Tie Off Cleat
Cat. No. 3
A general purpose tie off cleat which allows the lashing line to be pulled tight and trapped.
Material: I.C.I. nylon 6.
Fixing: No. 8 C.S.K. 25mm wood screws.

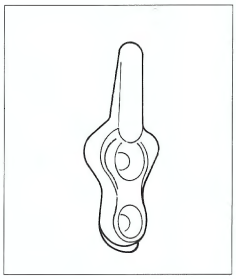

Tie Off Cleat
Cat. No. 39
For leading round and making off the finished end of lashing lines.
Material: Malleable iron casting.
Fixing: No. 8 C.S.K. 25mm wood screws.

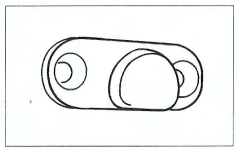

Flyrail Cleat
Cat. No. 135
For making off raise and lower rope lines.
Material: Malleable iron casting.
Fixing:
300mm 10mm Coachscrew
375mm 12mm Coachscrew
450mm 12mm Coachscrew

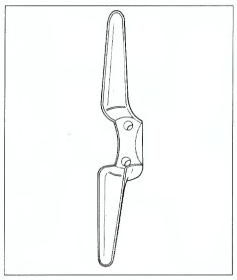

Throwline Cleat
Cat. No. 6
A general purpose cleat principally used for running around when lashing scenery flats together.
Material: I.C.I. nylon 6 (Cat. No. 6A) and
Die cast alloy (Cat. No. 6B)
Fixing: No. 8 C.S.K. 25mm wood screws.

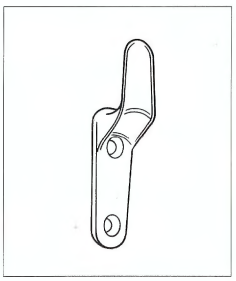

Sisal Rope Sizes Cat. No. 341	
Sisal Rope	10mm
Sisal Rope	12mm
Sisal Rope	16mm
Sisal Rope	18mm

Sashline Sizes	Cat. No.
Sashline Jute No. 4	343-4
Sashline Jute No. 5	343-5
Sashline Jute No. 6	343-6
Sashline Jute No. 7	343-7

Grummet
Cat. No. 274
This fitting is designed to screw and bolt to the top of a scenery flat to hold the fling cables in position.
Material: Mild steel
Fixing: 2 x 5mm dia. Round Head Machine Screws & Nuts
2 x No. 8 25mm C.S.K. wood screws.

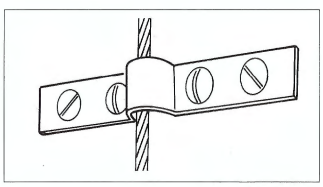

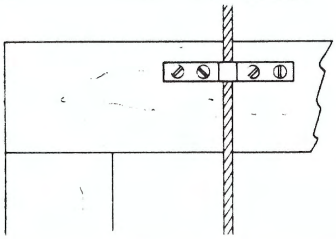

Ring Plate
Cat. No. 200
An alternative to the No. 274 grummet, the ring plate may also be used to suspend very light scenery.
Material: Mild steel plate with welded ring.

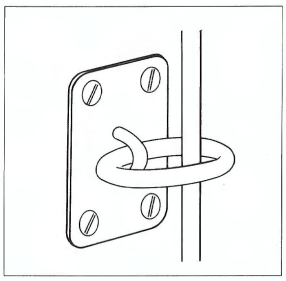

Fixing:2 x 5mm dia. Round Head Machine Screws & Nuts
2 x No. 8 25mm C.S.K. wood screws.

Hanging Irons
Where possible stage scenery should be picked up from the bottom rail by means of Hanging Irons.
There are two types manufactured; with the eye turned in and with the eye turned outwards. The former type is made flush with the bottom rail and the latter is usually cut into the stile when picking up from the bottom rail is not possible.
Material: Mild Steel.
Fixing: No. 10 C.S.K. wood screws.

Hanging Iron
25mm Eye In
Cat No. 175

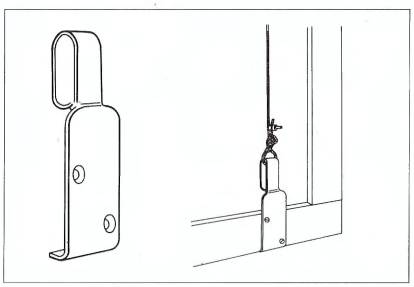

Hanging Iron
25mm Eye Out
Cat. No. 174

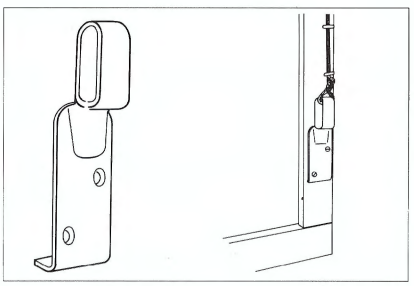

Flying Irons
May be used as an alternative to the "eye in" hanging iron, where the type of scenery does not permit its application.
Material: Mild steel
Fixing: 2 x no. 12 C.S.K. wood screws
1 x 10mm Carriage Bolt.

Plain Iron Cat. No 177A

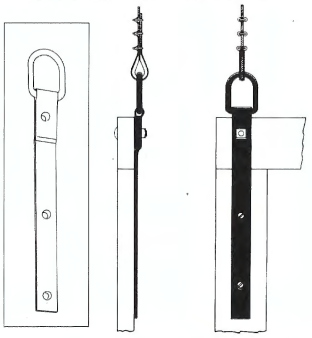

Lipped Iron Cat. No 177B

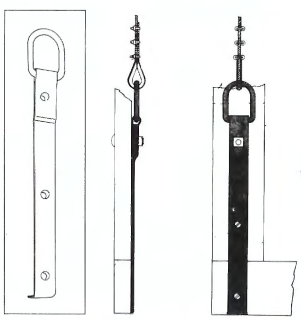

Scenery Fittings

Stud Plate
Cat. No. 304

Peg Plate
Cat. No. 21

Versatile fittings especially suited to situations which require the quick and simple fastening of scenery parts.
Material: Mild steel.
Fixing: No. 8 C.S.K. wood screws.

Stud Plate

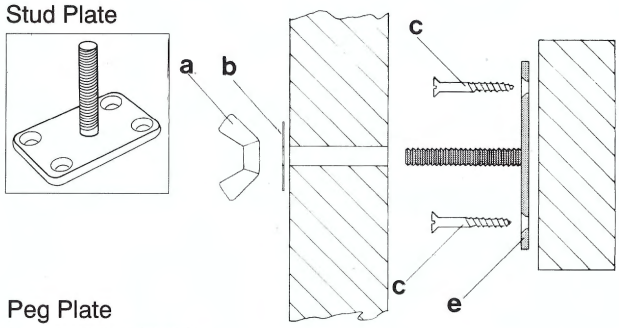

Peg Plate

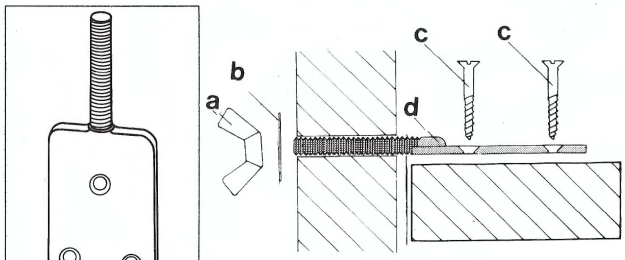

a	M10 Wing Nut
b	Protection plate for timber
c	No. 8 C.S.K. wood screws
d	Peg plate
e	Stud plate.

Thumbscrew
Cat. No. 100

Boss Plate
Cat. No. 99

A versatile fitting with a 10mm machine thread which can be used in conjunction with the No. 99 Boss Plate, No. 304 Stud Plate and No. 21 Peg Plate.
Material: Mild steel
Fixing: no. 8 C.S.K. wood screws.



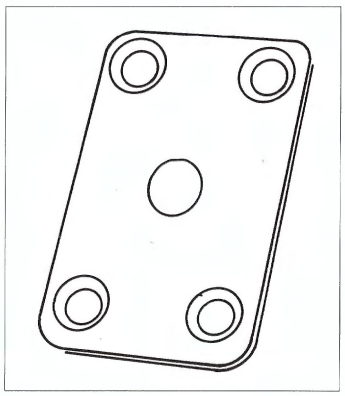

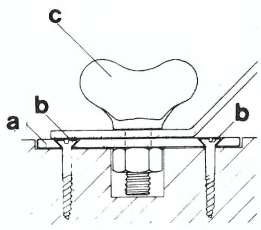

a	Boss Plate
b	No. 8 C.S.K.wood screws
c	Thumbscrew

Ceiling Plate with Ring
Cat. No. 275
Designed to provide a quick and easy method of assembling pre-fabricated scenery with a ring for suspending light constructions. May be used in conjunction with the No. 21 Peg Plate, No. 100 Boss Plate, No. 304 Stud Plate or Carriage Bolt with wing nut.
Material: Mild steel
Fixing: No.10 C.S.K. wood screws.

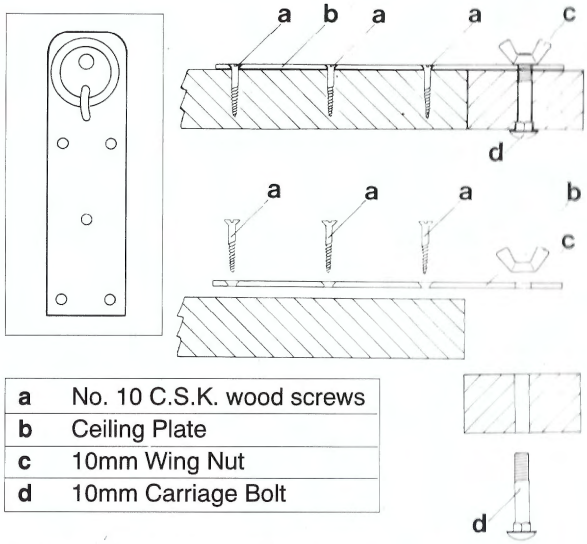

a	No. 10 C.S.K. wood screws
b	Ceiling Plate
c	10mm Wing Nut
d	10mm Carriage Bolt

Ceiling Plate without Ring
Cat. No. 276
Provides a similar function to that of the ringed type, but for assembly puropses only.

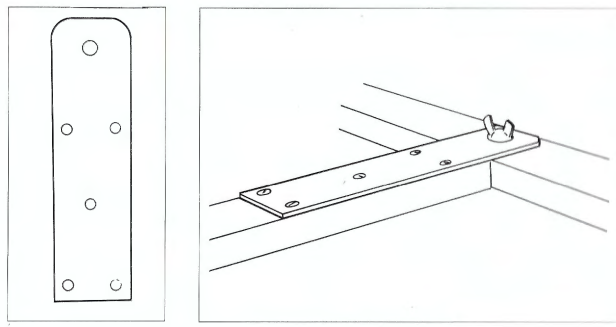

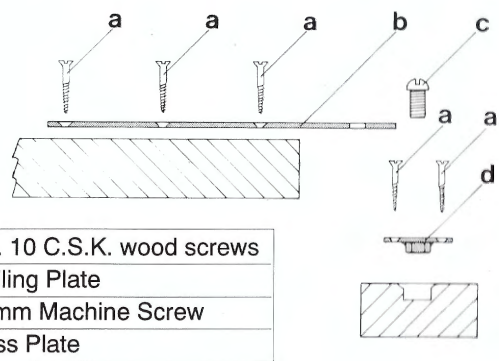

a	No. 10 C.S.K. wood screws
b	Ceiling Plate
c	10mm Machine Screw
d	Boss Plate

HARKNESS HALL LIMITED THE GATE STUDIOS STATION ROAD BOREHAM WOOD HERTS WD6 1DQ TEL: 0181 953 9371 / 3611 FAX: 0181 207 3657

Scenery Fittings

Universal Fitting
Cat. No. 232
Designed for use with curtain tracks, but has proved to have many other applications where barrels are to be suspended. There are various methods of suspension that may be used. The "D" ring for cable suspension, a standard Coachscrew for timber fixing or a Stud Bolt for use with a fixing bracket.
Material: Malleable iron casting.
Fitting sizes:

-37mm O.D.
37mm gas/48mm O.D.
50mm gas/60mm O.D.

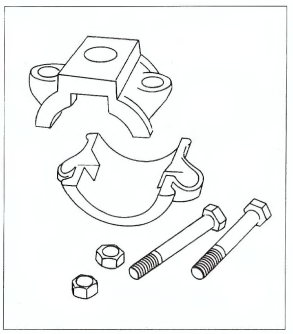

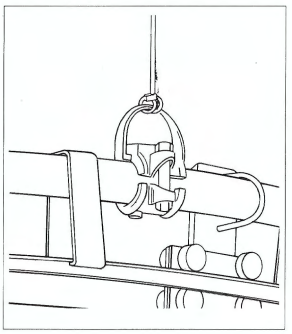

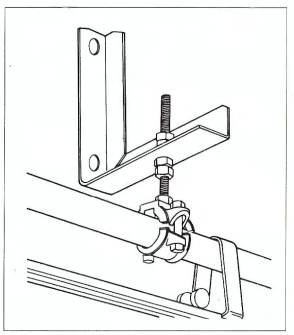

Tabhook
Cat. No. 287
Primarily used in conjunction with our range of curtain tracks, but also finds application where a small light hook is needed for stitching to material.
Material: I.C.I. nylon 6
Fixing: Overstitching

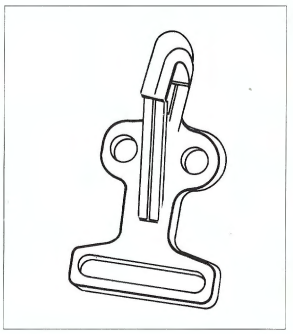

Twinhook
Cat. No. 900
Designed to enable the hanging of eyeletted curtains from our range of tracking. It can be less expensive to machine eyelet curtains than to hand stitch the conventional tabhook.
Material: I.C.I. nylon 6.
(This hook is tested to 45 kilo S.W.L.)

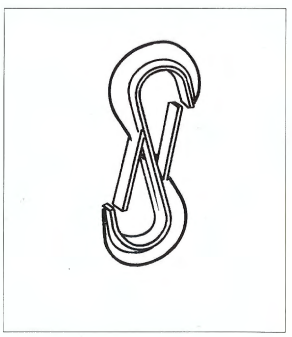

Top Batten Clip
Cat. No. 201
designed to avoid the bad practice of cutting holes in canvas for flying lines. The clip slides over the end of the cloth so that a number of turns of fabric can be taken up, thus shortening the cloth where flying height is restricted.
Material: Mild steel

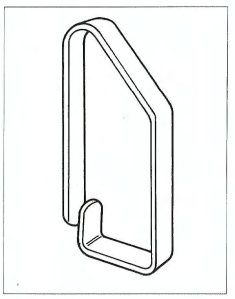

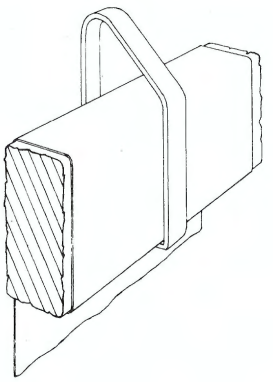

Barrel Sling
Cat. No. 760
Designed to allow scenery, curtain tracks and props to be easily and quickly attached to counterweight barrels.
Material: mild steel chain and hook.

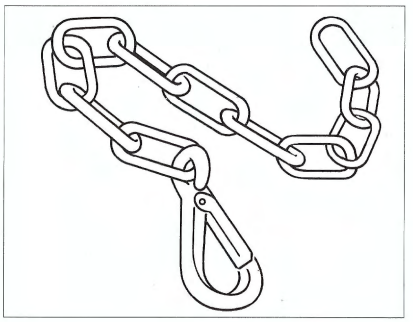

Cat. No. 761
The 0.7kg per m chain is generally supplied 1m in length but can be supplied with or without hook.
This chain is tested to a S.W.L. of 250kg.

"U" Bolt Fixing
Cat. No. 348
An economical and simple means of clamping tubes of similar or differing diameters together at 90°.
Material: Mild steel

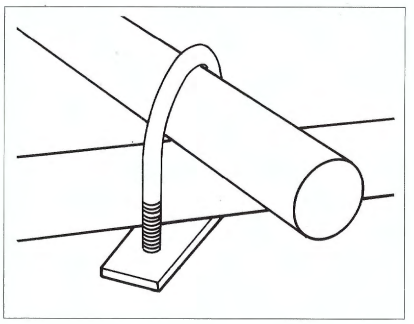

Scenery Fittings

Hanging Ring
Cat. No. 593
Used to suspend tubing on counterweighting or raise and lower sets.
Material: Mild steel
Sizes:

37mm gas (48mm O.D.)
50mm gas (60mm O.D.)

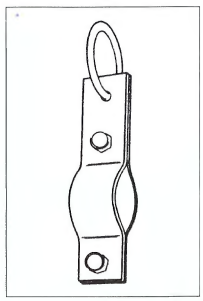

Fixing Iron
Cat. No. 176
Designed to screw or bolt to any flat surface which requires a suspension or restraining point.
Material: Malleable iron casting
Fixing: No. 12 C.S.K. wood screws.

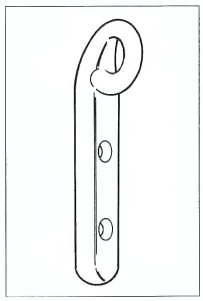

Adjustable Girder Clip
Cat. No. 337
Designed to clamp to any R.S.J. bottom flange to provide a suspension point for fitting a 12mm dia. Eye Bolt, Stud etc.
Sizes between 75mm and 150mm overall.
Material: Mild steel
12.5mm clearance hole for fitting eye bolts, stud bolts etc.

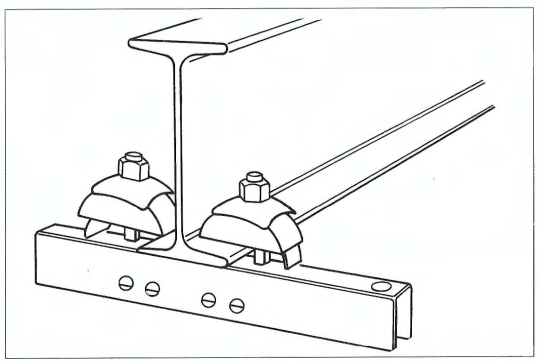

Barrel Sizes

Cat. No. 641

Barrel	37mm gas (48mm O.D.)
Barrel	50mm gas (60mm O.D.)

Cat. No. 642

Barrel	25mm x 1.5mm
Barrel	37mm x 1.5mm

Curved Barrel Sizes

Cat. No. 642

Curved Barrel	25mm x 1.5mm
Curved Barrel	37mm x 1.5mm

Sandbag
Cat. No. 619
Manufactured from durable canvas and supplied unfilled. They are attached to the counterweight or raise and lower lines after the removal of scenery barrels etc. to prevent running back.

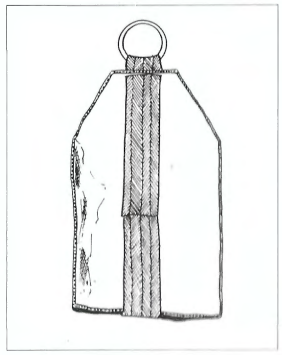

PROJECTION SCREENS AND SYSTEMS FROM HARKNESS HALL LIMITED

For over 70 years Harkness Hall Limited screens division has been designing, manufacturing and installing the world's finest projection screens and screen systems.

Theatres throughout the world are benefiting from Harkness Hall engineering and ingenuity with:

- Electric and manual roller screens up to 14.6M (48') wide
- Flying frame screen systems of any size with full close-over and multi-format electric masking systems if required
- Rear projection screens for special theatrical effects
- Portable screen systems up to 8.5M (28') wide
- Special custom-shaped screens to match designers' set requirements
- Silver screens for 3-dimensional projection

...and much more

In numerous projects where a 'total solution' is required Harkness Hall Limited provides both screen and stage expertise to offer customers the planning, manufacturing and installation advantages of a single source service. Almost anything is possible if it involves filmed images or projected light effects to any size.

Front and rear projection surfaces are always available off the roll (rear projection surfaces make ideal light diffusers) together with a comprehensive range of smaller fixed and portable projection screens - usually available from stock.

So whatever your "picture" or projected image requirements, choose a screen from

HARKNESS HALL LIMITED

SCREENMAKERS AND THEATRICAL SUPPLIERS TO THE WORLD

HARKNESS HALL LIMITED THE GATE STUDIOS STATION ROAD BOREHAM WOOD HERTS WD6 1DQ TEL: 0181 953 9371 / 3611 FAX: 0181 207 3657

Counterweighting Pulleys and Accessories

	Cat. No.
225mm dia grid pulley to suit channel guided system	204A
225mm dia pulley to suit back guided system	204b
300mm dia grid pulley to suit channel guided system	205
Single-purchase cradle, 2m, channel guided system	209a
Double-purchase cradle, 2m, channel guided system	210a
Single-purchase cradle, 2m, back guided system	210b
225mm dia rope return pulley; all systems	266a
300mm dia rope return pulley; all systems	266b
Lever rope locks; all systems	267
225mm dia 4-wire - 1 rope head - pulley - all systems	269a
300mm dia 4-wire - 1 rope head - pulley - all systems	269b
225mm dia 6-wire - 1 rope head - pulley - all systems	269c
300mm dia 6-wire - 1 rope head - pulley - all systems	269d
6mm dia 6 x 19 fibre core galv. cable with Talurit thimble eye one end	336
22mm dia manilla rope with spliced thimble eye one end	342

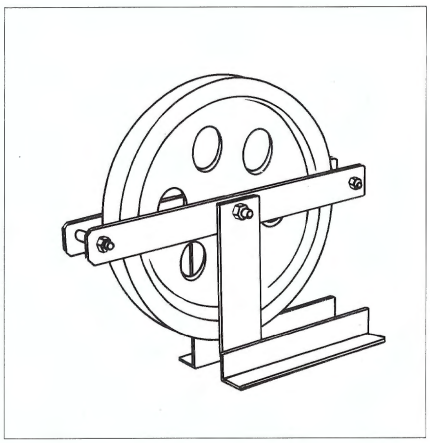

No.266

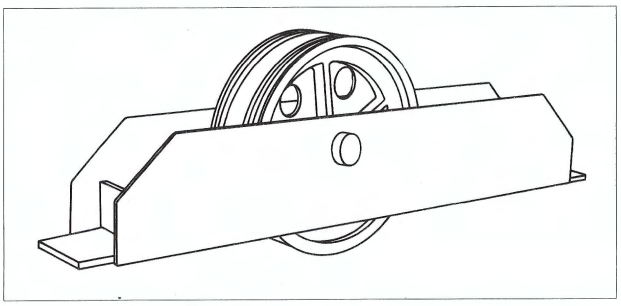

No. 269

No. 204

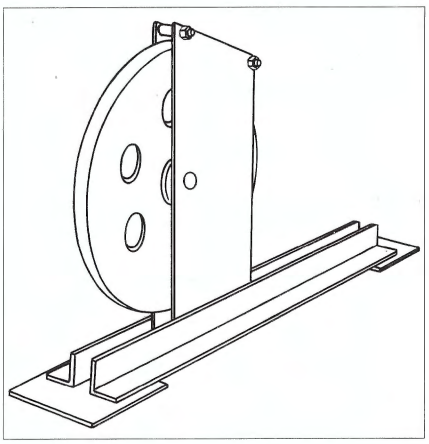

All sheaves are fully machined and ball-raced. All pulleys are complete and ready to install, with all the necessary girder dogs or hook bolts. We can, if required, supply fully machined and raced sheaves only, price upon application.

Counterweights

All sizes and weights shown are approximate.
Many other sizes and weights are available. For quantities in excess of 500kg of one size; prices upon application.
All counterweights listed are in cast iron.

	Cat. No.
300 x 150mm x 10kg - slots each end	262a
312 x 150mm x 14kg - tongues each end	262b
312 x 150mm x 14kg - slot and tongue	262c
150 x 150mm x 7kg buffer weight	262d
525 x 250mm x 25kg safety curtain weight	262e

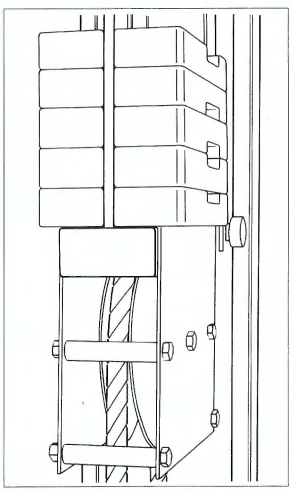

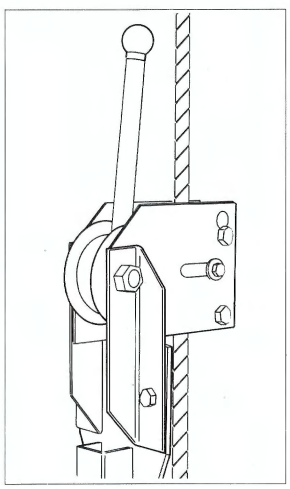

No. 267

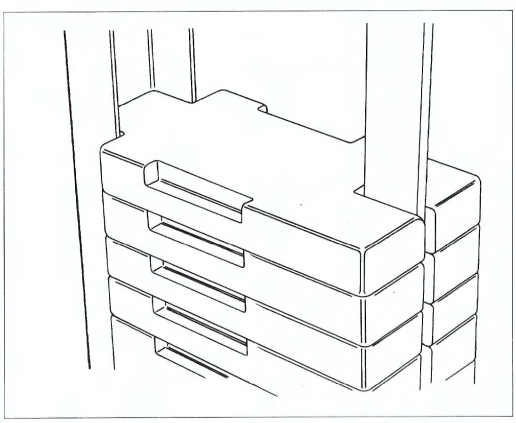

WE ARE ALSO ABLE TO SUPPLY COMPATIBLE PARTS FOR ANY MAKE OF COUNTERWEIGHT SYSTEM. TOGETHER WITH A FULL INSTALLATION OR MAINTENANCE SERVICE IF REQUIRED.

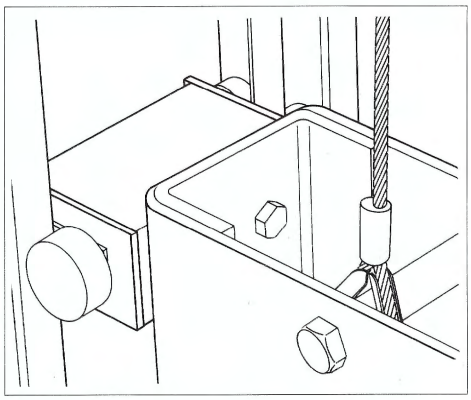

Counterweighting and Safety Curtains - Spares and Maintenance

Harkness Hall Limited can carry out all maintenance work to any manufacturers Counterweighting, Safety Curtains, Lantern Lights, Lifts etc., together with a full spares backup for all systems.

Upon completion of this type of work we issue our Safety Certificate which can be used for submission to local authorities as a note of worthiness of the relevant equipment.

Counterweight head sheaves

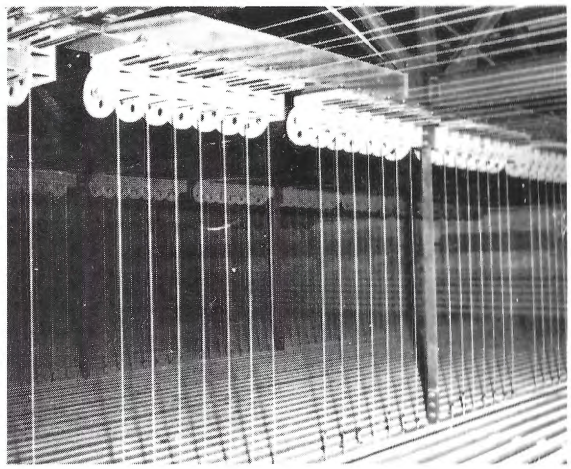

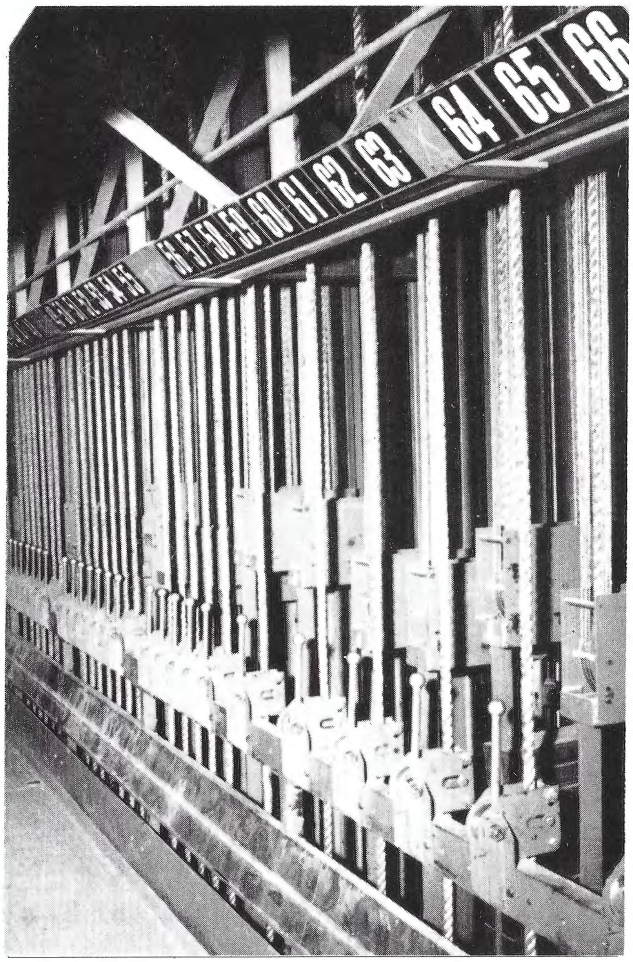

Counterweight sets and index board

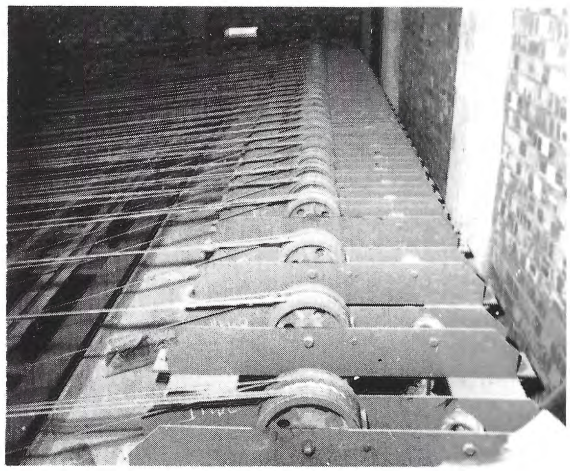

Rope locks and counterweight cradle

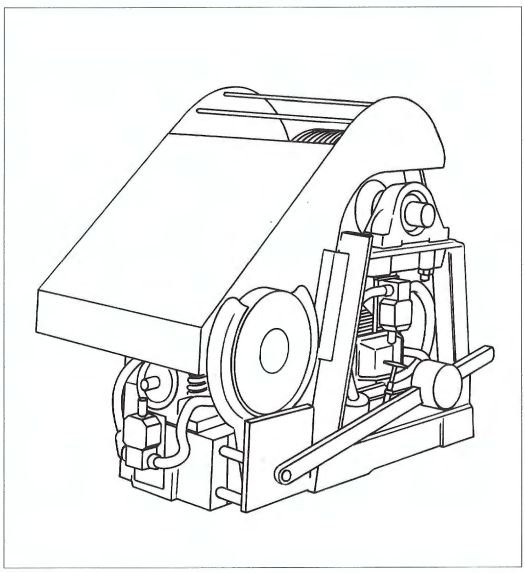

Safety Curtain hoist

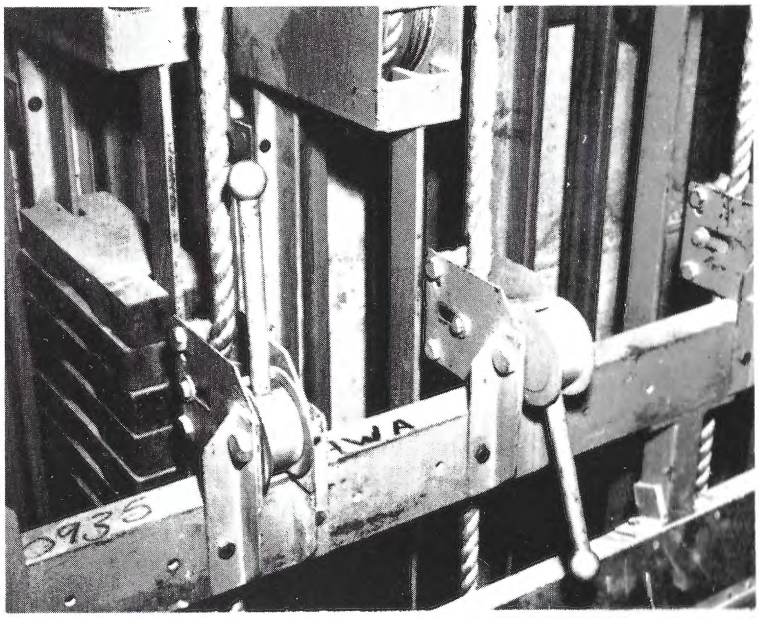

HARKNESS HALL LIMITED THE GATE STUDIOS STATION ROAD BOREHAM WOOD HERTS WD6 1DQ TEL: 0181 953 9371 / 3611 FAX: 0181 207 3657

T60 Overlapped Curtain Track Assembly for Sash-Line Operation

Drawing No. 1001

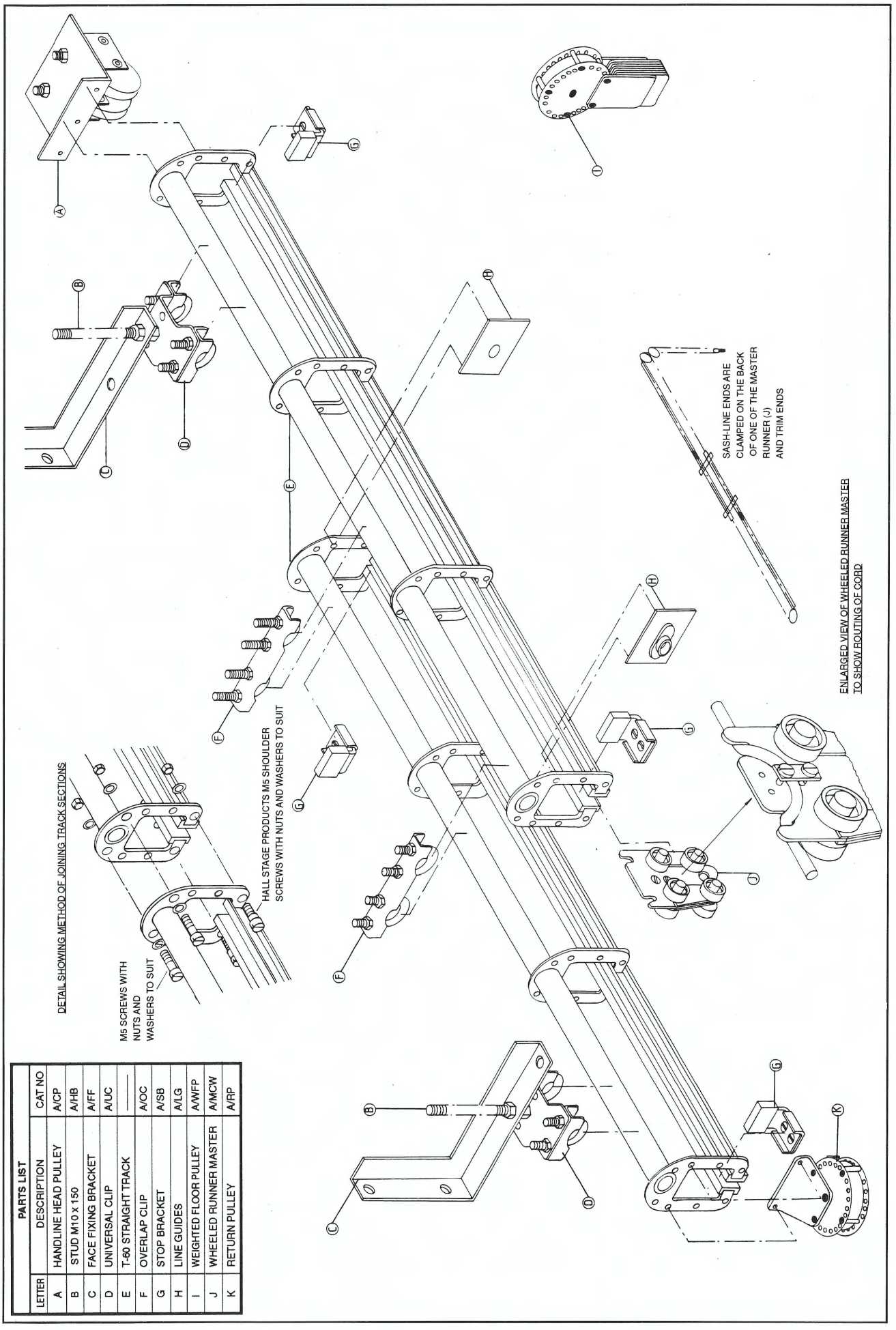

PARTS LIST		
LETTER	DESCRIPTION	CAT NO
A	HANDLINE HEAD PULLEY	A/CP
B	STUD M10 x 150	A/HB
C	FACE FIXING BRACKET	A/FF
D	UNIVERSAL CLIP	A/UC
E	T-60 STRAIGHT TRACK	——
F	OVERLAP CLIP	A/OC
G	STOP BRACKET	A/SB
H	LINE GUIDES	A/LG
I	WEIGHTED FLOOR PULLEY	A/WFP
J	WHEELED RUNNER MASTER	A/MCW
K	RETURN PULLEY	A/RP

HARKNESS HALL LIMITED THE GATE STUDIOS STATION ROAD BOREHAM WOOD HERTS WD6 1DQ TEL: 0181 953 9371 / 3611 FAX: 0181 207 3657

T60 Overlapped Curtain Track Assembly for Cable Operation

Drawing No. 1002

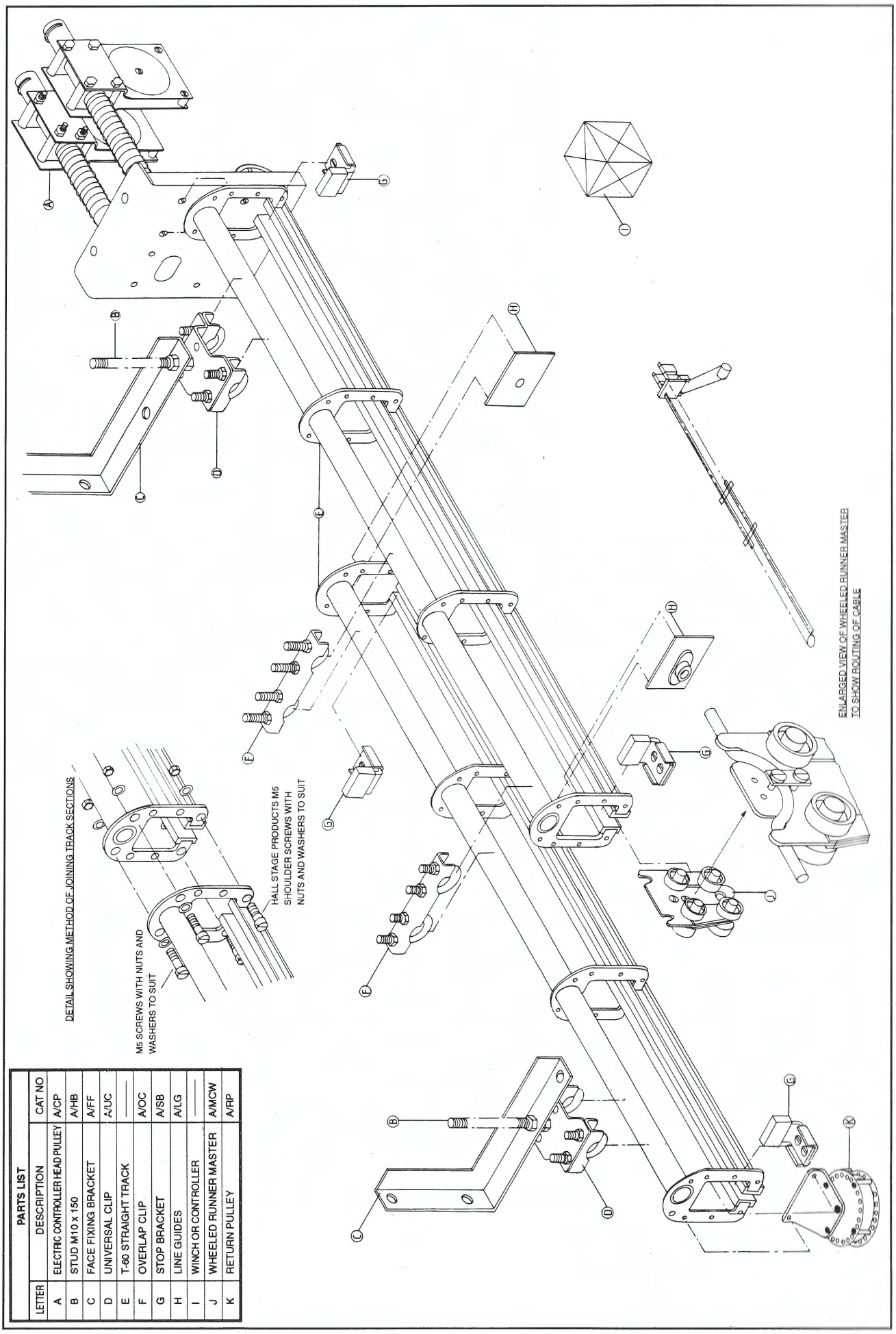

PARTS LIST		
LETTER	DESCRIPTION	CAT NO
A	ELECTRIC CONTROLLER HEAD PULLEY	A/CP
B	STUD M10 x 150	A/HB
C	FACE FIXING BRACKET	A/FF
D	UNIVERSAL CLIP	A/UC
E	T-60 STRAIGHT TRACK	———
F	OVERLAP CLIP	A/OC
G	STOP BRACKET	A/SB
H	LINE GUIDES	A/LG
I	WINCH OR CONTROLLER	———
J	WHEELED RUNNER MASTER	A/MCW
K	RETURN PULLEY	A/RP

HARKNESS HALL LIMITED THE GATE STUDIOS STATION ROAD BOREHAM WOOD HERTS WD6 1DQ TEL: 0181 953 9371 / 3611 FAX: 0181 207 3657

T400 Overlapped Curtain Track Assembly Sash-Line Operated

Drawing No. 1012/1

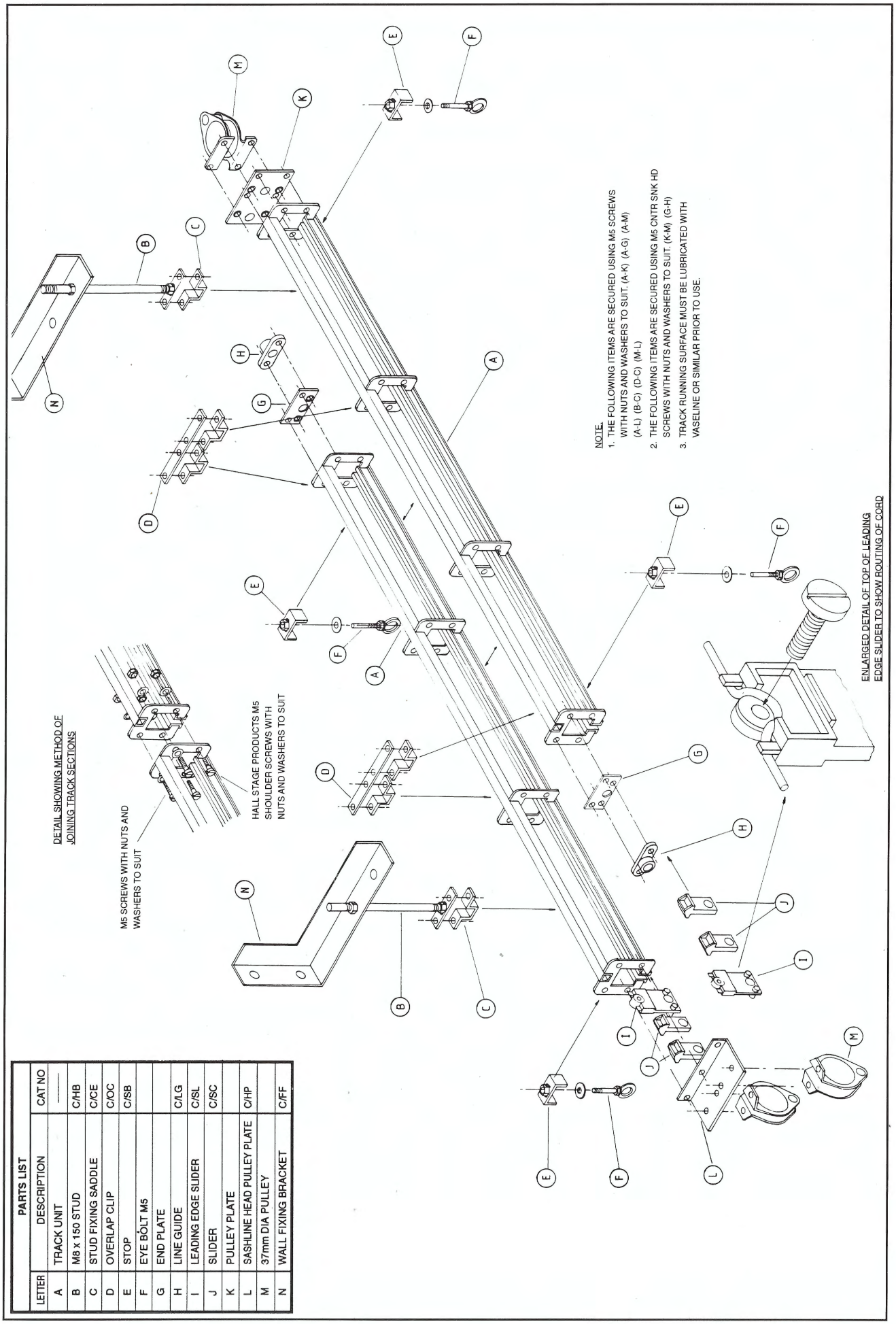

PARTS LIST

LETTER	DESCRIPTION	CAT NO
A	TRACK UNIT	———
B	M8 x 150 STUD	C/HB
C	STUD FIXING SADDLE	C/CE
D	OVERLAP CLIP	C/OC
E	STOP	C/SB
F	EYE BOLT M5	
G	END PLATE	
H	LINE GUIDE	C/LG
I	LEADING EDGE SLIDER	C/SL
J	SLIDER	C/SC
K	PULLEY PLATE	
L	SASHLINE HEAD PULLEY PLATE	C/HP
M	37mm DIA PULLEY	
N	WALL FIXING BRACKET	C/FF

T400 Overlapped Curtain Track Assembly with Cable Head Pulley

Drawing No. 1012/2

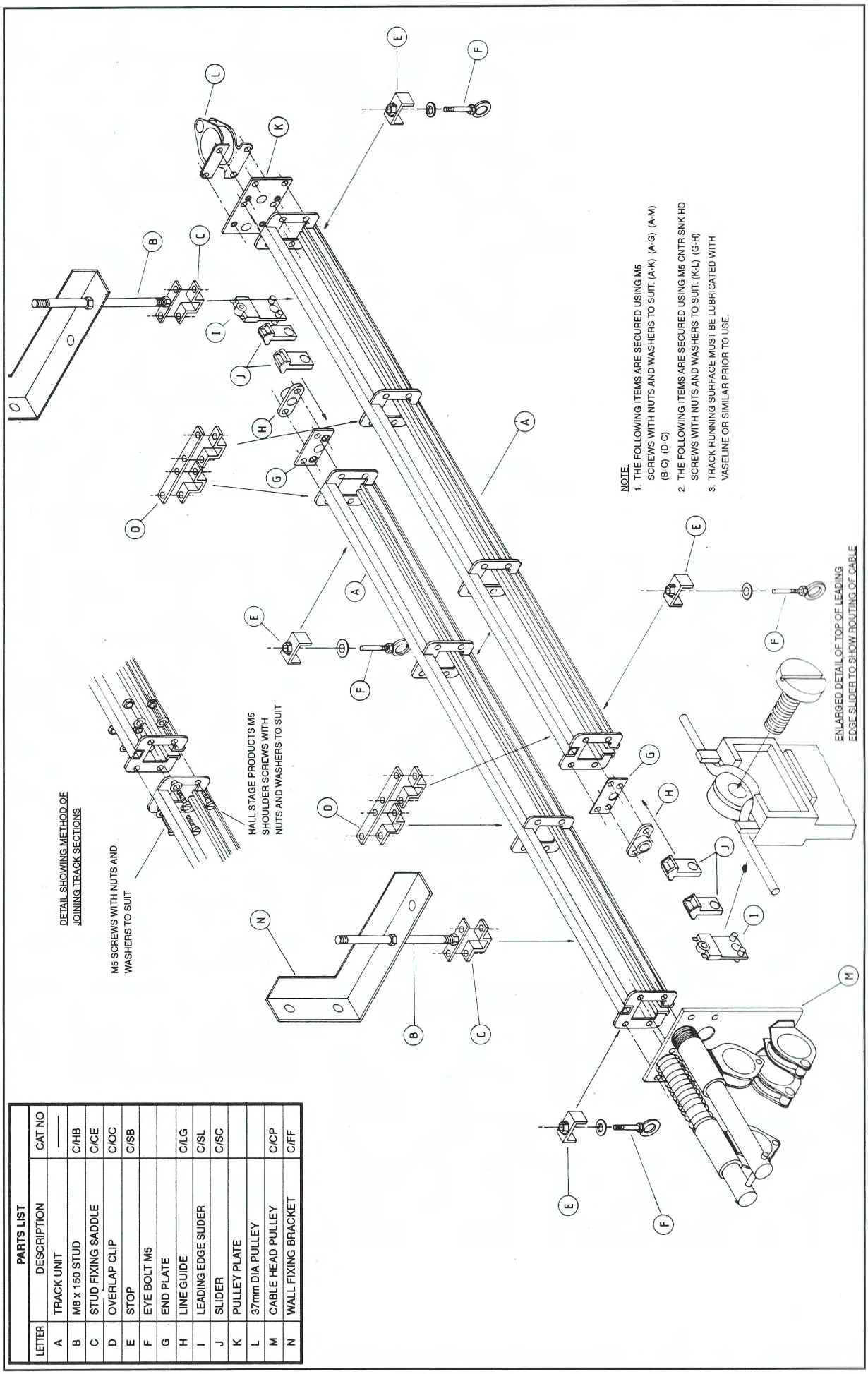

PARTS LIST		
LETTER	DESCRIPTION	CAT NO
A	TRACK UNIT	———
B	M8 x 150 STUD	C/HB
C	STUD FIXING SADDLE	C/CE
D	OVERLAP CLIP	C/OC
E	STOP	C/SB
F	EYE BOLT M5	
G	END PLATE	
H	LINE GUIDE	C/LG
I	LEADING EDGE SLIDER	C/SL
J	SLIDER	C/SC
K	PULLEY PLATE	
L	37mm DIA PULLEY	
M	CABLE HEAD PULLEY	C/CP
N	WALL FIXING BRACKET	C/FF

HARKNESS HALL LIMITED THE GATE STUDIOS STATION ROAD BOREHAM WOOD HERTS WD6 1DQ TEL: 0181 953 9371 / 3611 FAX: 0181 207 3657

T70 Overlapped Curtain Track Assembly with Sash Line Head Pulley

Drawing No. 1013/1

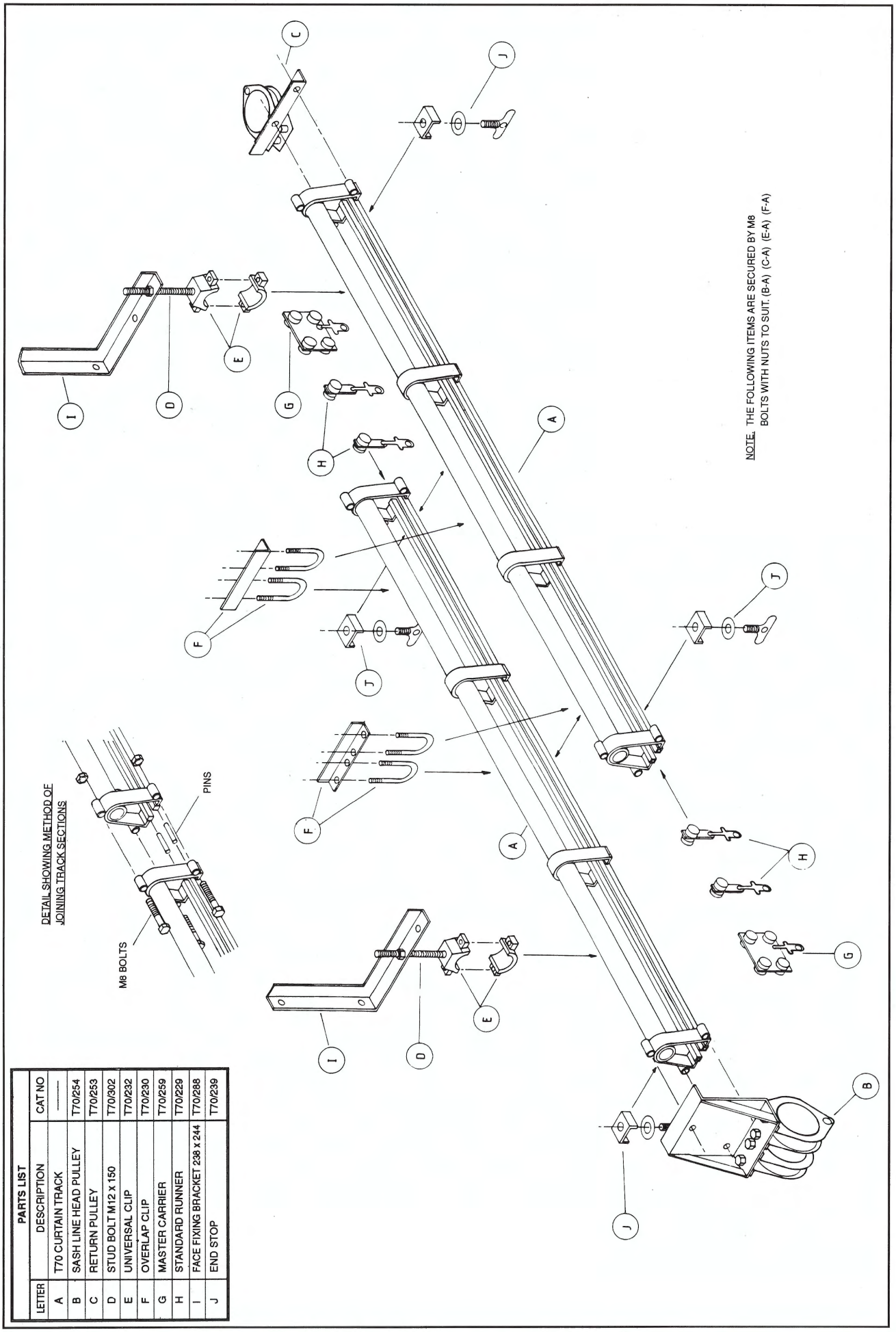

PARTS LIST		
LETTER	DESCRIPTION	CAT NO
A	T70 CURTAIN TRACK	———
B	SASH LINE HEAD PULLEY	T70/254
C	RETURN PULLEY	T70/253
D	STUD BOLT M12 x 150	T70/302
E	UNIVERSAL CLIP	T70/232
F	OVERLAP CLIP	T70/230
G	MASTER CARRIER	T70/259
H	STANDARD RUNNER	T70/229
I	FACE FIXING BRACKET 238 x 244	T70/288
J	END STOP	T70/239

T70 Overlapped Curtain Track Assembly with Spring Head Pulley

Drawing No. 1013/2

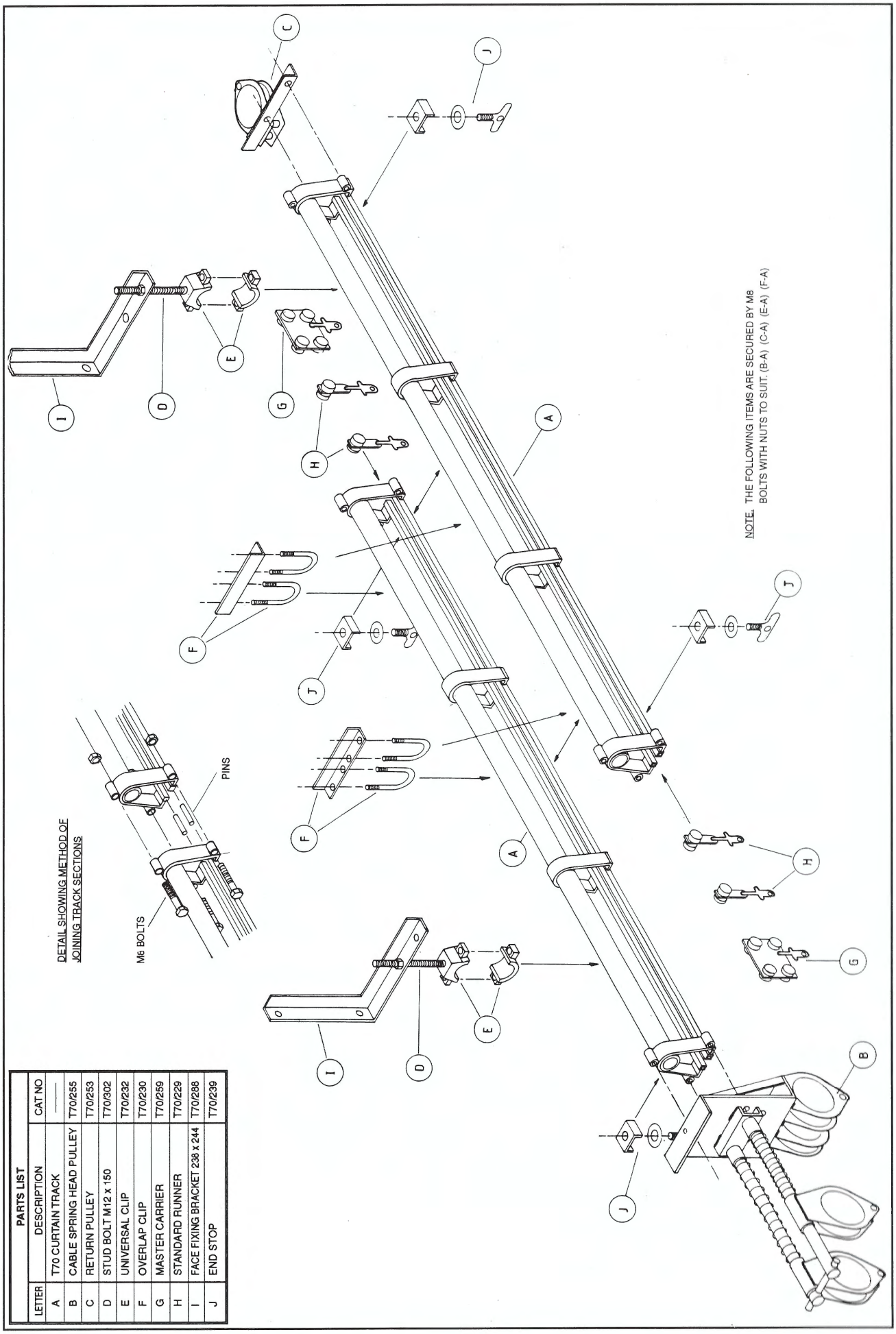

PARTS LIST		
LETTER	DESCRIPTION	CAT NO
A	T70 CURTAIN TRACK	——
B	CABLE SPRING HEAD PULLEY	T70/255
C	RETURN PULLEY	T70/253
D	STUD BOLT M12 x 150	T70/302
E	UNIVERSAL CLIP	T70/232
F	OVERLAP CLIP	T70/230
G	MASTER CARRIER	T70/259
H	STANDARD RUNNER	T70/229
I	FACE FIXING BRACKET 238 x 244	T70/288
J	END STOP	T70/239

HARKNESS HALL LIMITED THE GATE STUDIOS STATION ROAD BOREHAM WOOD HERTS WD6 1DQ TEL: 0181 953 9371 / 3611 FAX: 0181 207 3657

FHR 500
Pebble Convex

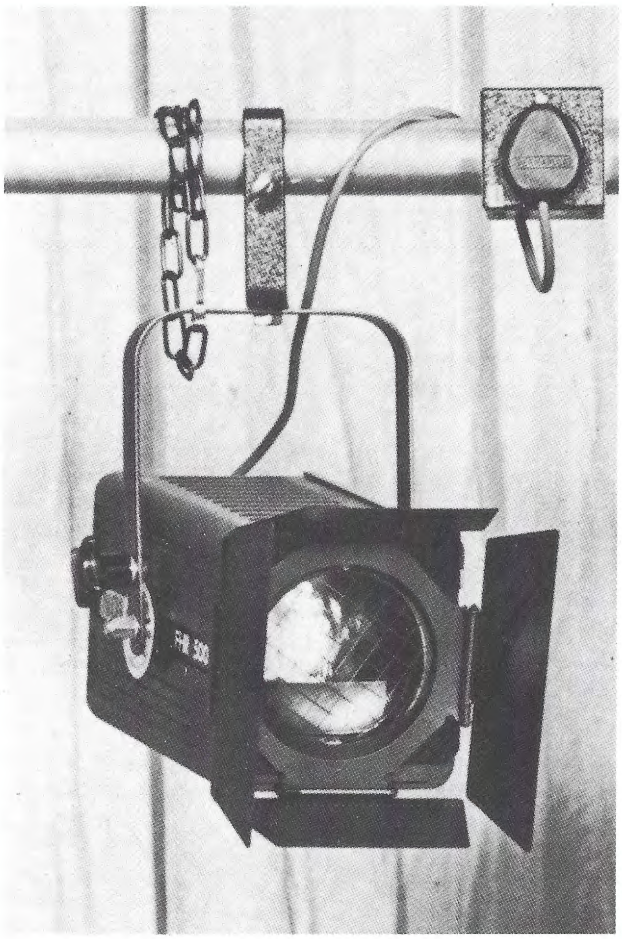

A versatile lantern with hard edged beam.

Suitable for most stage and drama areas as either accent or general lighting, dependent upon the beam angle used.

Adjustable beam angle 10° - 35°

Suitable lamps:

650w T26/27 GY9.5
500w T18/25
300w M38

Weight 3.5kg.

NOVA 6" FRESNEL

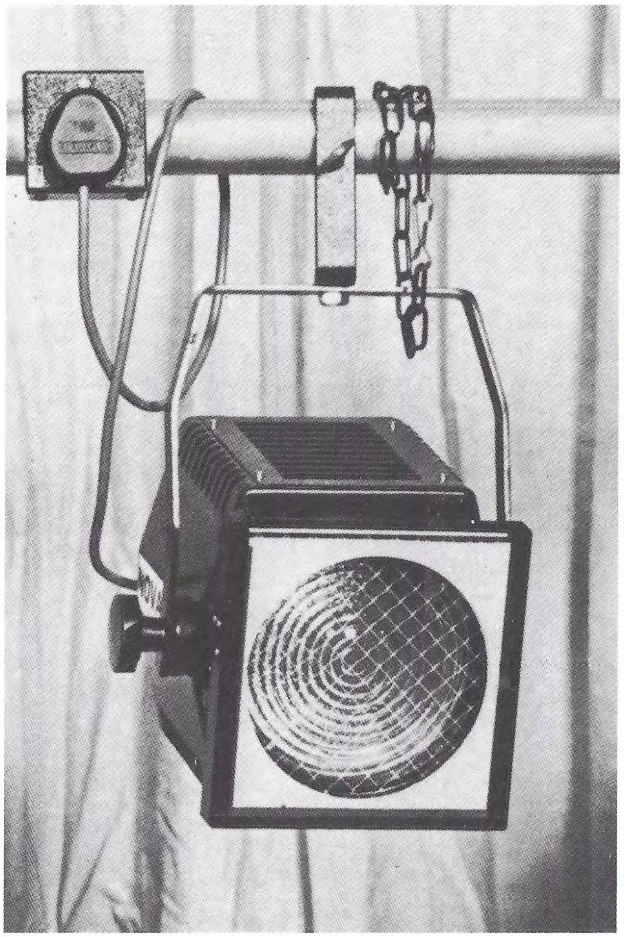

A powerful lantern with soft edged beam.

Adds punch to any T.V. studio, stage or drama area.

Excellent optics coupled with unique interchangeable nosecones make this a very versatile lantern.

Adjustable beam angle 18° - 68°

Suitable lamps:

650w T26/27 GY9.5
500w T18/25
300w M38

Weight 5kg.

Stage and Studio Lighting

FHR 500F
(Fresnel 4½" Lens)

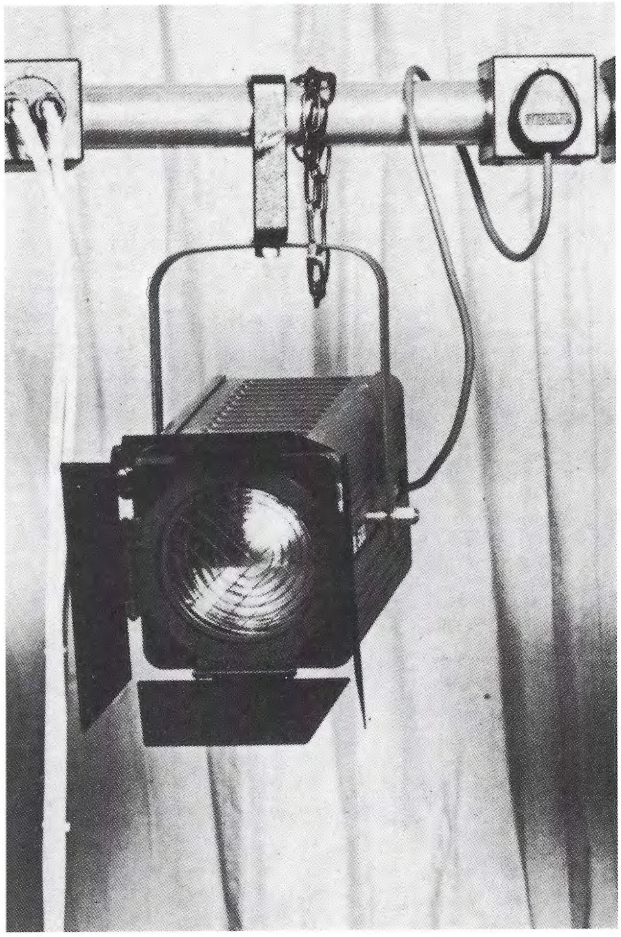

A very useful lantern for stage and drama studio use as general lighting.

The fresnel soft edge beam allows grouping of lanterns without hotspots.

Adjustable beam angle 18° - 58°

Suitable lamps:

650w T26/27 GY9.5
500w T18/25
300w M38

Weight 3.5kg.

CHR 500
(Flood)

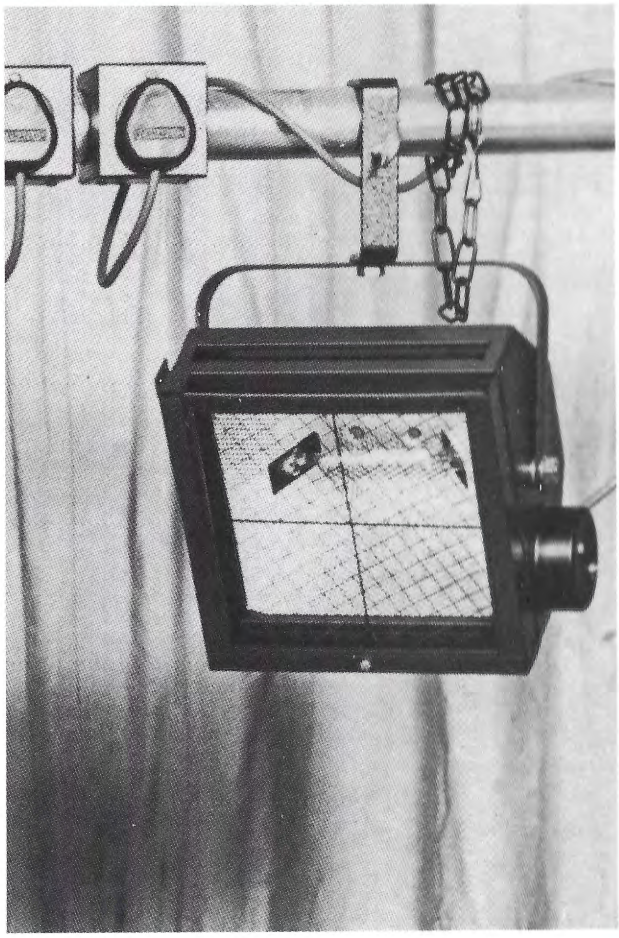

A powerful halogen linear lantern coupled with a precise alloy symmetrical reflector.

A superb floodlight for cyclorama or general area use.

Fixed beam angle approx. 50°

Suitable lamps:

K9 300w Quartz Linear
K1 500w Quartz Linear

Weight 2.4kg.

HARKNESS HALL LIMITED THE GATE STUDIOS STATION ROAD BOREHAM WOOD HERTS WD6 1DQ TEL: 0181 953 9371 / 3611 FAX: 0181 207 3657

NOVA 500
Follow Spot

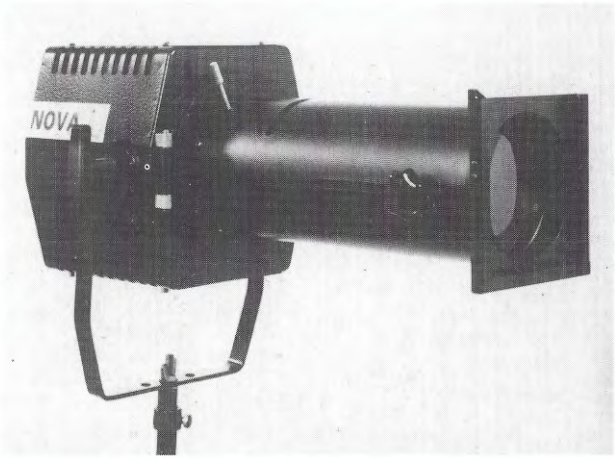

Nova 500 10 degree focus follow spot complete with interchangable Iris and shutter assembly kit.

This lantern has been designed to provide a high output light source specifically for the smaller location.

It is suitable for use as a follow spot up to distance of 20 metres.

- Fixed beam angle 10°
- Soft and hard focussing
- Adjustable carriage focus

Suitable lamps:

GY9.5 500w T18/25
GY9.5 500w M40 (Long Life)

Weight 8.5kg

Note: Suitable stands are available for this product.

AURORA 2.4KW
Follow Spot Dimmer

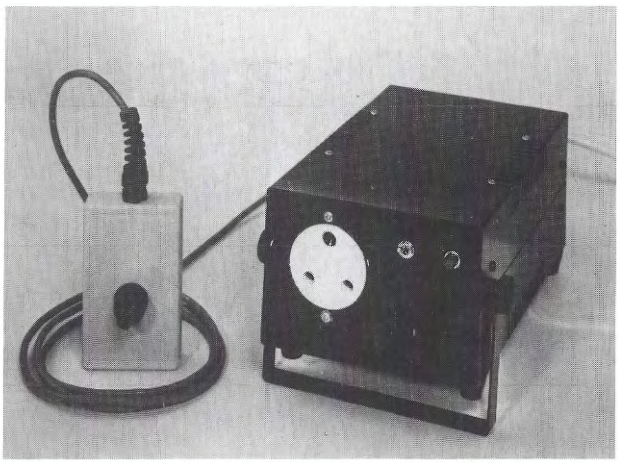

Designed specifically to operate inductive or resistive loads this unit can be operated either from the front panel or via a hand held remote controller.

Fitted with the latest circuitry this dimmer features:

- Automatic level adjust of output to 10° of nominal mains supply fluctuation when at mid point setting
- Soft start in event of mains failure
- HBC fusing with neon indication of healthy supply
- Locking 8 pin Din connection to remote handset
- Switchable local remote operation
- Handset has handy beltclip for hands free operation
- Either 15amp or Schuko socket outlet
- 2m mains input lead terminated in either 13amp or Schuko plug

Serviceable parts:

10amp HBC 32mm fuse

Weight: 3kg

Stage and Studio Lighting

FHR2000PC
Pebble Convex



This hugely powerful lantern will enhance the lighting rig of any large stage or studio. With precise optics and lead screw operated lamp tray accurate focussing is quickly and smoothly attained.

Adjustable beam angle of 5° to 50°

Suitable lamp:

GY16 CP43

Weight 15kgs

Dimensions:

A	340mm
B	470mm
C	500mm

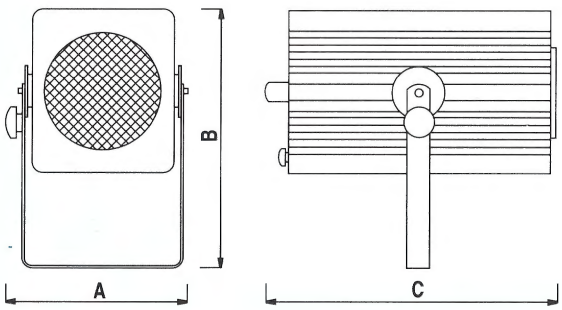

CHR1000FL
Floodlight



This powerful lantern is a must for adding punch to your lighting in the larger venue.

Available either in symetrical or asymetrical versions it can be used singly or grouped to form a compartment floodlight.

Beam angle: Fixed focus floodlight.

Suitable lamp:

Linear K4 1000w

Weight 5.6kg

Dimensions:

A	350mm
B	300mm
C	210mm
D	260mm

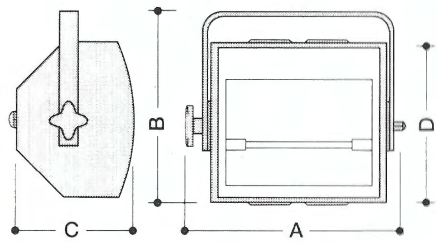

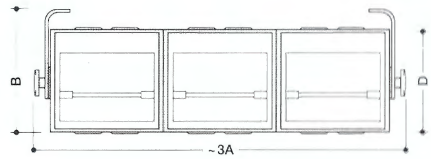

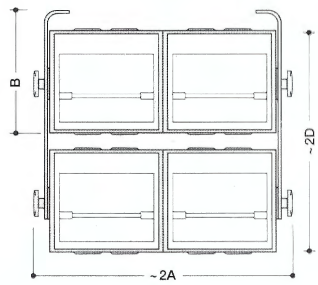

METHODS OF GROUPING

HARKNESS HALL LIMITED THE GATE STUDIOS STATION ROAD BOREHAM WOOD HERTS WD6 1DQ TEL: 0181 953 9371 / 3611 FAX: 0181 207 365

FHR1000F
Fresnel



A versatile lantern designed for the larger venue where an even soft edged beam is required.

Excellent optics coupled with lead screw focus control make this a very useful lantern.

Adjustable beam angle 18° to 65°

Suitable lamps:

GX 9.5 T19 or equivalent Studio lamp.

Weight 7.2kg

Dimensions:

A	310mm
B	350mm
C	390mm

Note: Suitable stands are available for this product

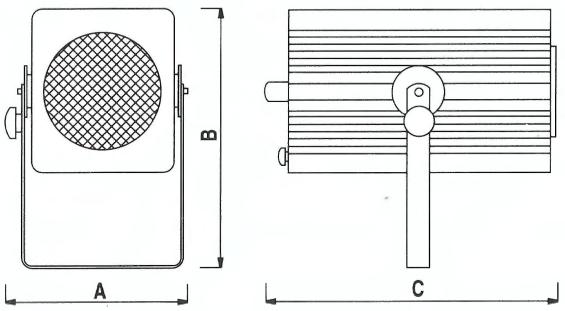

FHR1000PC
Pebble Convex

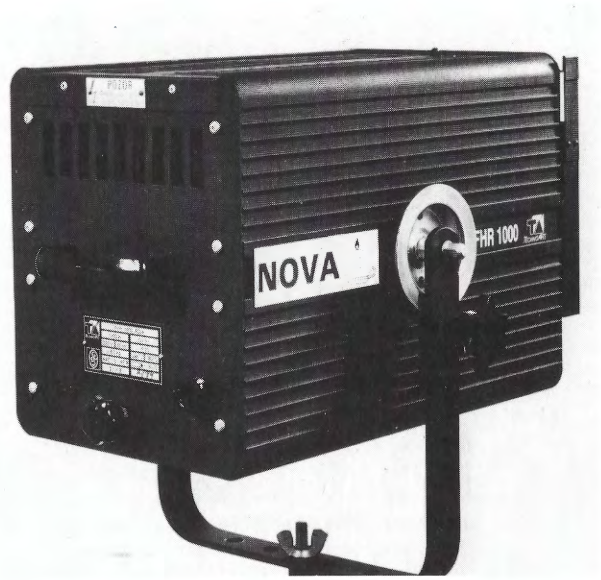

A powerful lantern for the larger venue with hard edged beam suitable for accent or general lighting.

Lead screw focus control allows precise operation of the optic carriage.

Adjustable beam angle 8° to 60°

Suitable lamps:

GX 9.5 T19 or equivalent Studio lamp.

Weight 7.2kg

Dimensions:

A	310mm
B	350mm
C	390mm

Note: Suitable stands are available for this product

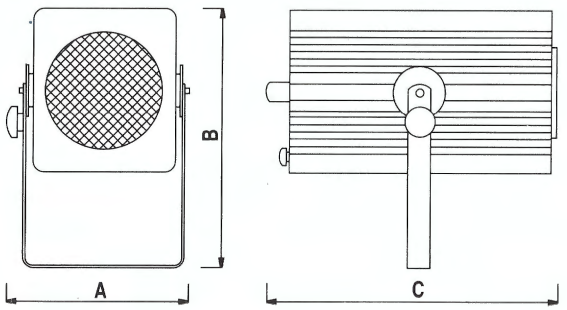

Note: FHR1000F and FHR1000PC differ in lens characteristics only. For information photographs show front and rear of lantern

Stage and Studio Lighting

Stage Effect Light NA 180

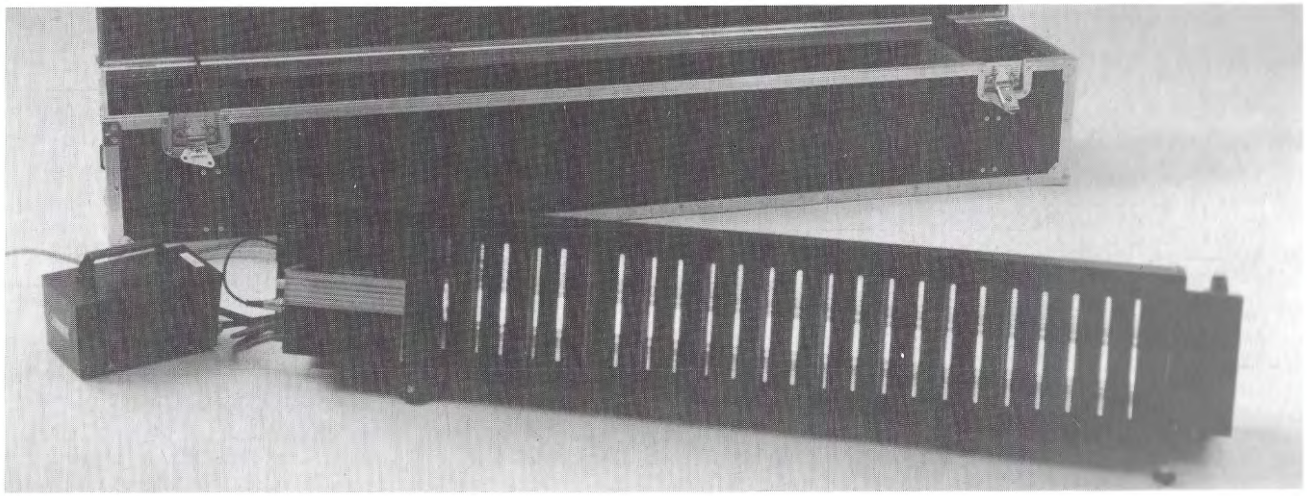

Our new stage effect light NA 180 offers a whole range of lighting effects designed to fit your staging requirements for all kinds of theatre, opera and variety stage shows.

Thanks to this new light, the colours of the illuminated object can be changed (with the exception of yellow) and transformed into varied shades of grey. Accordingly from the spectator's point of view, the colour of the actor's skin pigments can be changed with this particular kind of lighting.

The actual light source consists of a 180w low-pressure sodium lamp which produces monochromatic light with a wavelength of 570-580nm. It is fitted into a box with an integrated electrical shutter. This newly designed shutter operates on the blinds principle and functions noiselessly and is therefore particularly suited for theatre stage productions. Motor control is achieved through a separate control unit. Blinds adjust without interruption and the shutter can be opened and shut within 0.5 seconds.The NA 180 can also be used as a footlight. Light projection can be symmetrical, according to type. Due to construction parameters, this lamp is only suitable for horizontal projection.

Technical characteristics:

Dimensions:	1280mm x 200mm x 120mm (excluding the motor control unit)
Weight:	14.7kg
Paintwork:	black (other colours on demand)
Shutter unit:	230v
Power supply:	50/60 Hz AC
Drive:	electro motor
Control signal:	+ 10v DC
Adjustment:	uninterrupted
Light source:	
Lamp:	sodium low pressure lamp
Output:	180w
Light:	monochromatic, 570-580 nm
Light current:	33000 1m
Base:	BY 22 d
Light projection:	symetrical or asymetrical
Power supply:	transformer 230v, 50/60 Hz AC

Motorised Shutter Dimmers

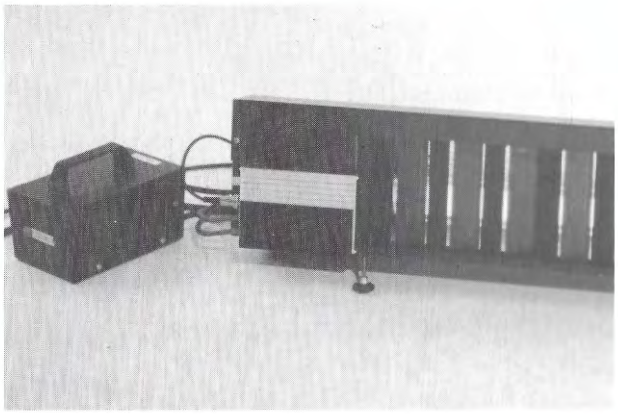

Designers - add a new dimension to your lighting as have the Paris Opera House and many others throughout Europe.

Motorised shutter dimmers for non-dimmable light sources such as CSI etc.

Available in all sizes to customer specification. (illustration on NA180 above).

- Silent operation
- Smooth dimming action
- Analogue 10V
- or Digital DMX 512

Suitable uses would be large follow spots and area floodlights using a discharge light source.

When enquiring please state:-

- lantern make and type with gel frame size
- control preference of Analogue or Digital

to allow us to quote prices.

Specification: To customer's requirements to special order.

HARKNESS HALL LIMITED THE GATE STUDIOS STATION ROAD BOREHAM WOOD HERTS WD6 1DQ TEL: 0181 953 9371 / 3611 FAX: 0181 207 365

Stage and Studio Lighting

Control Unit Junior 6

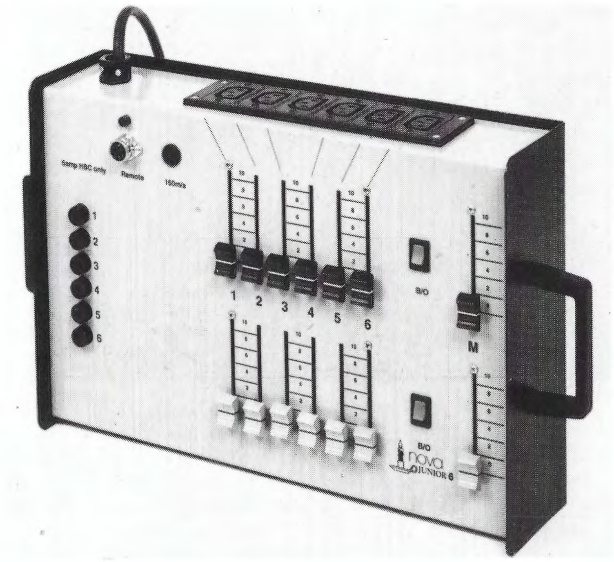

The Junior 6 comprises a 2 preset control desk with masters and blackout switches, 6 dimmer outputs via CEE22 outlets at the rear.

The integral unit is ideal for Junior School, Photographic Studios and Drama Studios where a 13amp power socket is all that is available.

The unit can drive other compatible dimmer units or be driven by other compatible control desks via the panel mounted 8 pin locking Din socket.

Technical Details:

2 preset control desk driving 6 x 1kw dimmers handling a total electrical load not exceeding 15amps of tungsten/ inductive load via CEE22 sockets.

Power: 220/240 VAC 1 Ph 50 hz.

Size: Length 470mm
Width 270mm
Height 100mm

Weight: 5kg

Colour: black crackle base with light blue top.

Serviceable parts:

Circuit fuses: 5amp 20mm HBC

Control: 160m/a 20mm Antisurge

Satellite Controls

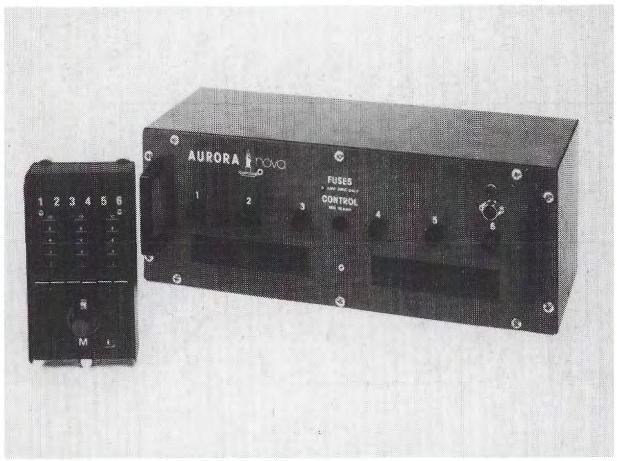

For teaching, rigging or remote operation of up to 6 dimmer channels the Satellite controller enhances your installation and provides greater flexibility of the system.

Satellite controls are available in 6 ways with overall rotary master fader and complement the AURORA and most other positive control volt ranges of dimmer.

Dimensions - All types:

Width 106mm
Depth 50mm
Length 196mm

Colour: black with white legends.

Control cables are supplied in 5m and 10m lengths. Non-standard lengths can be supplied to order at extra cost.

Connections from desk position and dimmers should be via our REMOTE OUTSTATION AND JUNCTION BOXES if the lead lengths exceed 10 metres and are permanently installed.

If unsure please ask for technical assistance.

Illustration shows Satellite 6 and Aurora dimmer hardware combination suitable as Drama or Restaurant lighting control system

Stage and Studio Lighting

POWER PACKS
New AURORA 2.4Kw

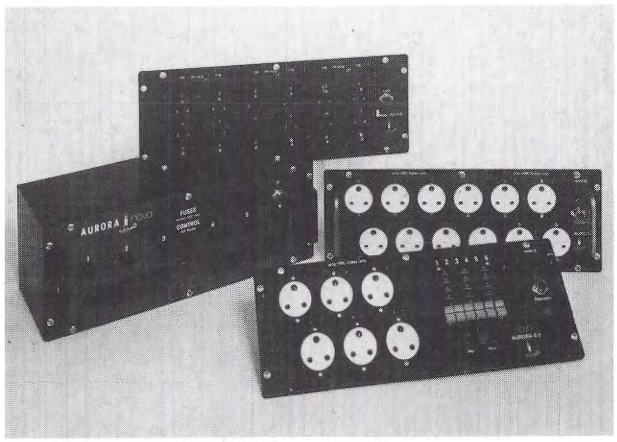

The new AURORA system is a novel approach to dimmer rack construction designed specifically by our engineers to improve installation time by electrical contractors without specialist stage lighting experience.

The electronics and wiring are all contained within a drawer type chassis which includes the front panel. The chassis/front panel assembly is fitted with handles to allow it to be withdrawn from the case which can then be attached to the wall with suitable screws via the rear keyhole slot.

A suitable diameter hole is required in the side of the case to connect the mains supply via conduit or flexible cabling. With the tray partially in position the mains may be connected to the relevant power terminals. The tray can then be pushed fully home and screwed into position.

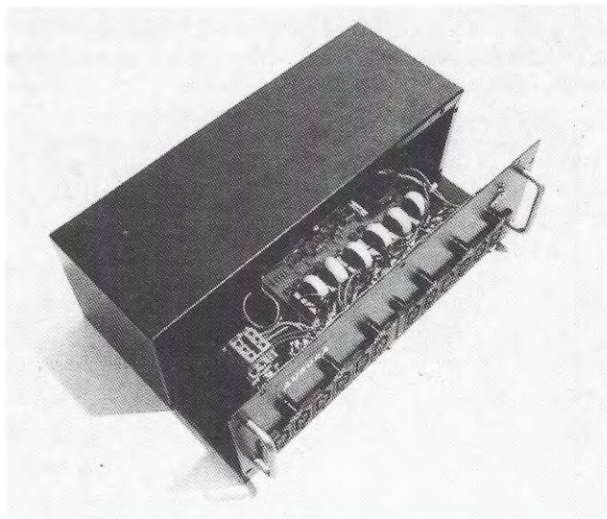

Ventilation is provided by a set of louvre vents at the rear of the case, the whole of the chassis tray being the semi-conductor heatsink.

Circuit protection is via 32mm HRC ceramic fuses situated next to the socket outlets and overall power supply protection is achieved with a 160m/a anti-surge fuse.

AURORA is available in European, CEE22, 15amp and 13amp shuttered socket outlet variants as well as integral front panel mounted control versions.

Each channel is rated at 2.4Kw and is suitable for the control of tungsten or inductive loads.

The dimmers feature our standard automatic level adjustment circuit, soft start, pre heat adjust, 10% mains regulation and compliance with EMC regulations 1996.

The only user serviceable parts are the fuses which may require replacing after luminaire lamp failure.

Connection to the control desk is via an 8 pin locking din socket situated next to the mains healthy indicator on the front panel.

Technical details:

6 channels individually rated at 2.4kw

Maximum total load of 60amps of inductive/resistive tungsten luminaires.

Power:	220/240 volts AC 50Hz, 1 phase. 3 phase to order for overseas customers	
Dimensions:	Length	490mm
	Width	175mm
	Depth	180mm
Weight:	5.6kg	

HARKNESS HALL LIMITED THE GATE STUDIOS STATION ROAD BOREHAM WOOD HERTS WD6 1DQ TEL: 0181 953 9371 / 3611 FAX: 0181 207 365

Lightmaster XL
Lighting Desk



The Lightmaster XL is a 12 channel, 2 preset lighting desk that brings outstanding perfomance and value for money to the small desk market.

Features include 108 cues, 9 pages of memory with 12 memory submasters, plus a further 250 sequence memories. A fully programmable MIDI interface together with DMX512 and 10V analogue AND fully programmable effects are part of the standard specification.

Technical Specification:

Electrical

Analogue output	1 to +10volts
Digital output	DMX 512 to 1990 spec (user selectable)
MIDI	Full implementation of MIDI/MMA SPEC
Power supply	200 to 260 Vac 50Hz 100 to 130 Vac 60Hz (internally selectable) 20W
Audio input	Stereo; greater than 30mV, input impedance 22kΩ

Physical

Operating environment	+5 to +40°C (non condensing)
Net weight	7kg
Dimensions	520 x 330 x 100mm

Lightmaster XLS
Lighting Desk

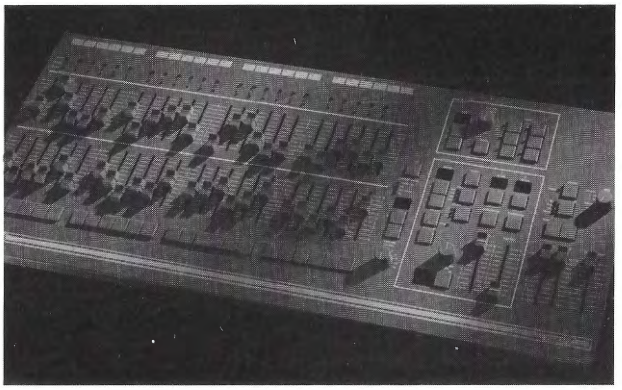

The Lightmaster XLS is a 24 channel version of the XL.

In addition to the XL specifications the XLS features 216 cues, 9 pages of memory, 24 memory submasters and 2 chaser masters.

There are also 24 channels of auxiliary control accessed through an independent control section for use with colour changers.

Lightmaster XL and XLS are linkable and have memory card facilities

Technical Specification:

As XL but

Net weight	10kg
Dimensions	825 x 345 x 105mm

Stage and Studio Lighting

Sirius 24 and Sirius 48 Lighting Desks

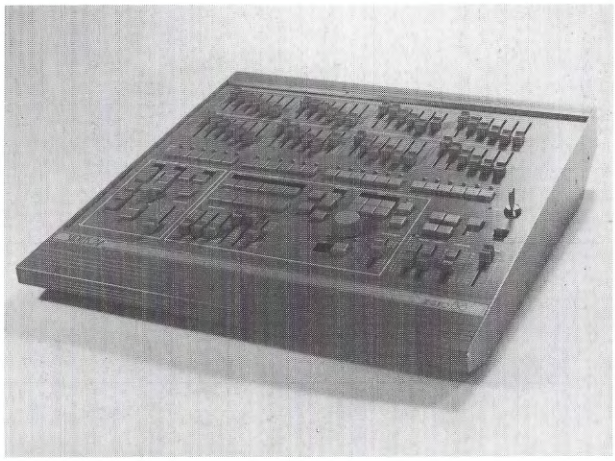

Combining sophistication with user friendliness, the Sirius 24 brings a whole package of advanced technology to the smaller lighting console.

Sirius offers simplicity, versatility and value for money making it ideal for theatre, touring schools, colleges and night clubs.

The Sirius 24 features 24 channels with 2 presets. 99 programmable level memories, 9 level chases, 90 'insert' level memories and 200 'insert' level chases. There are 398 total cues available.

The keyswitch allows restricted use of the console, Presets only or Run only, allowing a wide variety of users with varying levels of competence.

Memories are programmed on Preset B. Each action of the 'Go' button initiates a sequential playback from the 'stack' of programmed memories, including programmed fade up and down times. Chases may be inserted into the memory 'stack' facilitating a full operating sequence from memory.

Memories and chasers at different speeds may be played back on the 6 manual masters. If required, the presets, chaser, Manual Masters and the 'Go' button may be used simultaneously. Any memory or chase may be programmed and edited 'blind'. Any memory or chase may be previewed at any time - even whilst in live operation. A 'Superuser' facility allows access to memory and chase 'clearout', as well as Clic Trac and Memory Card operation. To aid the user there is a full LED indication of all channel and memory information.

Two standard Sirius may be simply and economically linked using a standard 8 way DIN cable.

Sirius 48 Lighting Desk

Specification as for Sirius 24 but with 48 channels

Technical Specification

Standard outputs (internally selectable)	200 to 260 volts 100 to 130 volts 50 or 60 Hz
Optional outputs	Internally fitted Negative Output Kit supplies a negative output or a simultaneous + and - output at the same voltage.
Audio input	Stereo greater than 30mV; input impedence 22k
Dimensions	
Sirius 24	610 x 615 x 120mm (max)
Sirius 48	610 x 1070 x120mm (max)
Weight	
Sirius 24	12.5kg
Sirius 48	23.5kg

HARKNESS HALL LIMITED THE GATE STUDIOS STATION ROAD BOREHAM WOOD HERTS WD6 1DQ TEL: 0181 953 9371 / 3611 FAX: 0181 207 365

Level 12, Level 18 and Level 24 Lighting Controllers



The Level Series is a range of small stage manual lighting control systems featuring 2 presets with opposing Master faders. Each preset has an independent timer for fading between 1 second and 3 minutes, and has an associated flash button which overrides the fade time and flashes the preset to the level set by the preset Master.

Level 12 (pictured bove), Level 18 (pictured below) and Level 24 (not illustrated) have 8 pin locking DIN fixed sockets, each providing control for six output channels. A +20v supply (usually from poweracks) is required; the output voltage is 0 to +10 volts.

Technical Specification

Level 12	
Dimensions	380 x 280 x 89.5mm
Weight	3.65kg
Level 18	
Dimensions	510 x 280 x 89.5mm
Weight	4.60kg
Level 24	
Dimensions	640 x 280 x 89.5mm
Weight	5.74kg
Power Supply	+20 volts @ 20mA
Channel Output	0 to +10 volts Maximum load 25kΩ

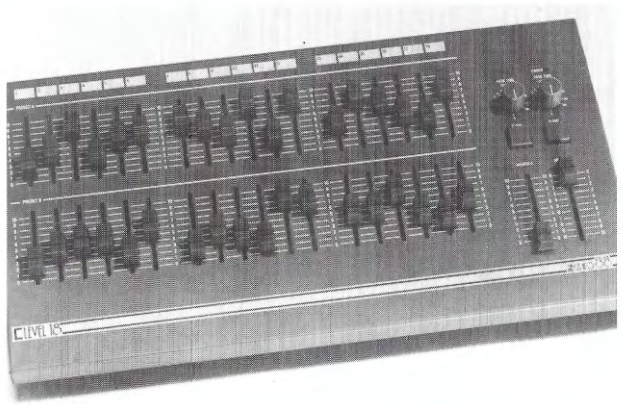

Demux 48 Demultiplexer

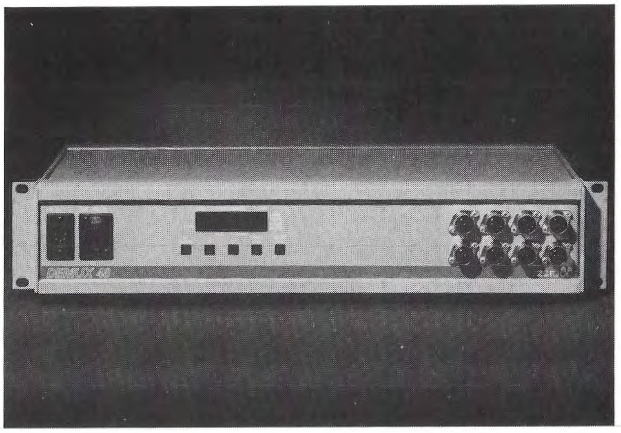

The Demux 48 demultiplexer is designed to convert DMX512 into 48 channels of analogue control. Standard output voltages are one of +5, +10, or +15v. 24 channel Negative Output Kit(s) may be fitted allowing simultaneous positive and negative outputs.

The Demux 48 also features programmable start channel, programmable back up memory and memory fallback if DMX fails. Individually programmable channel law and individual channel test facilities.

The Demux 48 is 19" rackmounting or freestanding.

Technical Specification

Data reception conforms to USITT DMX 512-1990 standard and earlier.

Power Supply (internally selectable)	200 to 260 volts AC 100 to 130 volts AC (fused internally)
Input	Power feed to unit via IEC cable supplied
Standard outputs	0 to +5 volts or +10 volts or +15 volts Eight 8 pin locking DIN sockets on the front. The rear panel is prepunched to accept Socapex and QM connectors. A 30ch Socapex kit is available.
Optional outputs	Use Negative Output Kit(s) as described above. Optional rear panel prepunched for XLR7, Bleecon and DIN sockets is available. XLR7, Bleecon and 8 pin locking DIN output kits are available.
Max output	5 mA continuous. Short circuit protected.
Operating environment	5 to 40°C non condensing
Dimensions	433 x 85 x 240mm
Weight	5kg

Stage and Studio Lighting

Alpha Pack
Power Controller

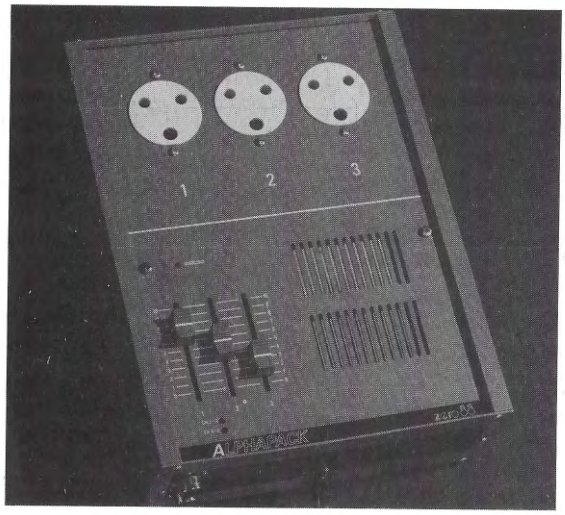

Alpha Pack is a 3 channel portable, wall or stand mounted general purpose dimmer pack capable of driving up to 6.3 Amps of lighting control per channel which is particularly suitable for use in live music, schools and education.

It has both local control and remote control via an 8 pin DIN connector.

A unique feature of Alpha Packs is an overload protection circuit which senses any total load in excess of the maximum across the three outputs. The overload circuitry is factory set.

Each Alpha Pack has 2 8 pin DIN connectors: 'In' and 'Through'. The 'Through' connector allows packs to be daisy chained together.

A channel selection switch will determine whether response is to input channels 1, 2 and 3 or 4, 5 and 6.

An optional special mounting bracket is available for wall mounted or to allow hanging from a hook clamp.

Packs with a choice of 3 15 Amp UK Sockets (illustrated above), 6 16 Amp Schuko Sockets, 6 16 Amp French Sockets or 6 6 Amp CEE 22 Sockets are available.

Technical Specification

Electrical

Power Supply	200-260V ac 50Hz or 100-130V ac 60Hz Single Phase
Power Input	Via a 3m fixed cable
Max Current	Limited to 10/13/16A (+/- 1.5A)
Load per channel	1.44kW @ 240V 720W @ 120V
No load consumption	6W
Input signals	0 to +10V
Desk supply	+20V @ 50mA
Min input impedence	80kΩ
Earth leakage	<1mA

Interference Suppression to BS800

Physical

Operating environment	+5 to +40°C (non condensing)
Dimensions	315 x 240 x 180mm
Net weight	3.5kg

Betapack
Dimmer Packs

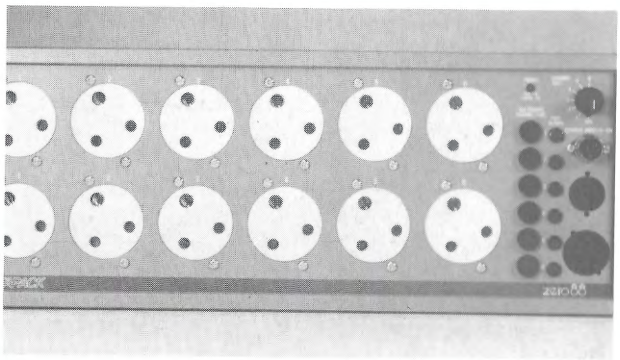

The Betapack has been designed to bring to the entertainment industry professional standard product at a reasonable cost.

A range of economic 4U high rack/wall/free standing 6 channel x 10 Amp dimmer packs which offer a wide and comprehensive selection of output options including Hardwired, UK, 15 Amp, French, Schuko, CEE17, CEE22, and Swiss sockets.

Technical Specification

Supply frequency (internally selectable)	50 or 60 Hz
Max operating temp	40°C ambient
Interferance suppression	Meets BS800/VDE 0875
Input signals	0 to +/- 10V, Autosensing
Power feed (to desks)	+/- 20V
Dimensions (without mounting brackets)	443 x 177 x 240mm
Net weight	9kg
No of channels	6
Max total load	14.4kW @ 240V 7.2kW @ 120V
Max load per channel	10 Amps
Min load per channel	100 milliamps
No load consumption	10 Watts
Power supply (separate isolator and secure mains earth required in all cases)	a. 60A 1 phase 2 wire 230/115V b. 20A 3 phase 4 wire (Star) 250/440V c. 30A 3 phase 3 wire (Delta) 230/115V

Phase to Neutral voltage must not exceed 250V.

HARKNESS HALL LIMITED THE GATE STUDIOS STATION ROAD BOREHAM WOOD HERTS WD6 1DQ TEL: 0181 953 9371 / 3611 FAX: 0181 207 365

Stage and Studio Lighting

Lighting Bars

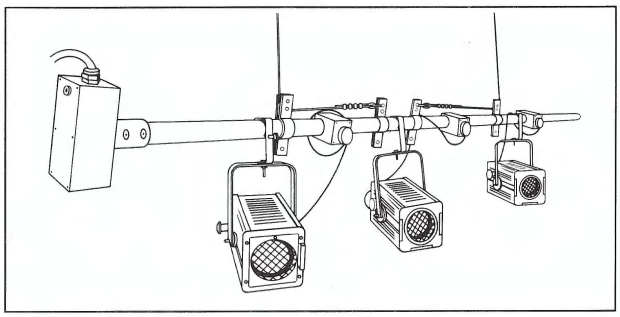

Nova Lighting Bars are fabricated from thick walled 48mm OD aluminium tube.

Outlet sockets are housed in a two part steel case with easy maintenance screw release.

Boxes are normally finished in powder coated black crackle but other colours are available to special order.

End boxes are mounted on Kee Klamp flanges and all cabling is terminated on Din rail connectors. Boxes are earth bonded to the tube.

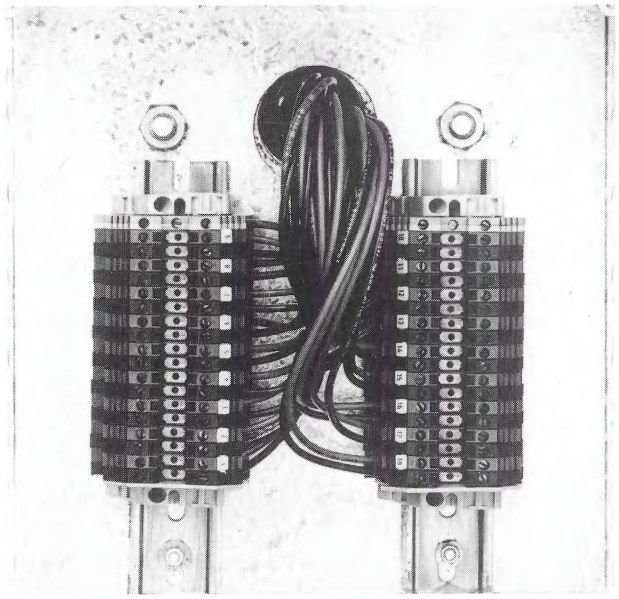

Available in all sizes. Please specify length, number and type of socket outlets required.

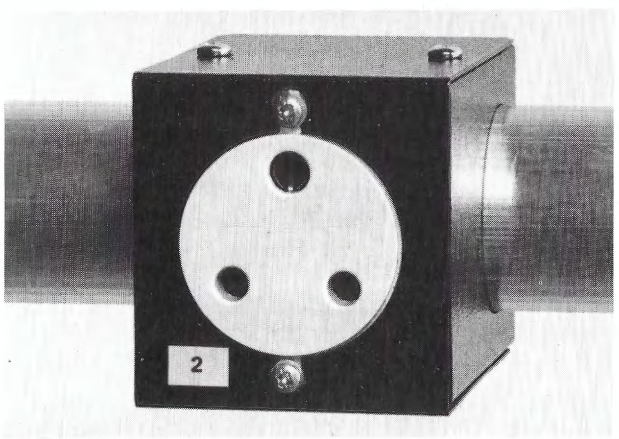

Drama Lighting Stand

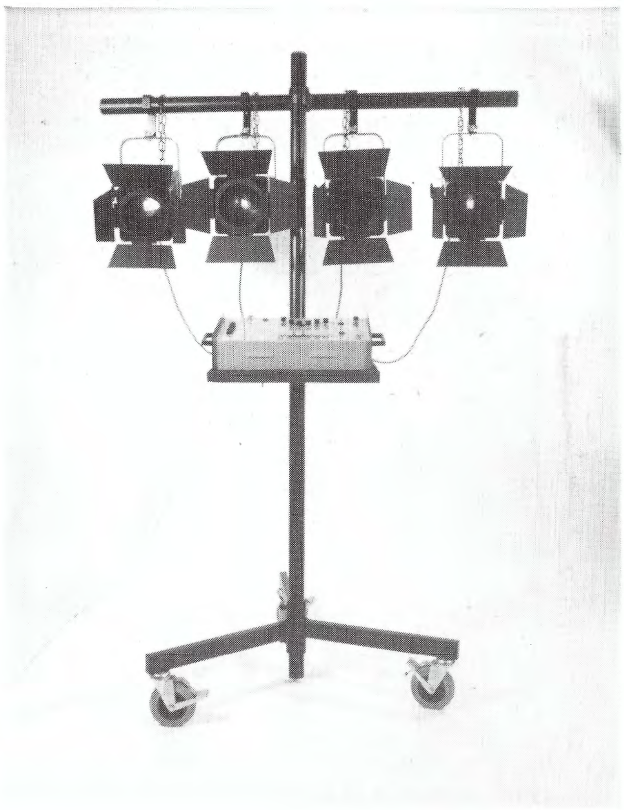

Designed for safety in the drama area, this stand has an upright and crossbar fabricated from 48mm OD aluminium tube. The crossbar height is adjustable by using the Allen Key supplied.

The cruciform Dolly is mounted on 4 robust lockable rubber wheels and the upright is securely clamped to the base.

Lanterns may be suspended on the crossbar without having to remove the hook clamp thus allowing greater flexibility of lighting locations.

A suitable tray mounting to ccommodate the Junior 6 Control unit is available as an optional extra.

Dimnsions:

	Upright	2m
	Crossbar	1m
	Dolly	750mm x 750mm
Weight:	20kg	

Stage and Studio Lighting

Zarges Zaletta Three Part Skymaster

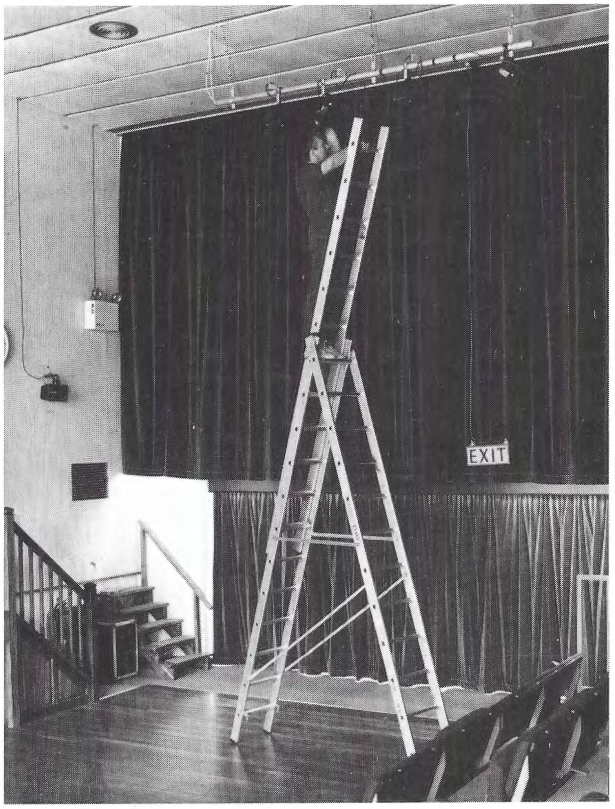

At working height 6m

Zaletta 3-Part Skymaster - can be used as trestle steps with push-up section.

Versatile and safe - middle and upper sections can be telescoped.

Hooks with lifting security.

The ladder cannot be accidentally pushed up or down.

When used as a set of trestle steps with a push-up section, the firmly mounted locking bars make for greater safety.

Can be used on stairs.

With angle incline indicator.

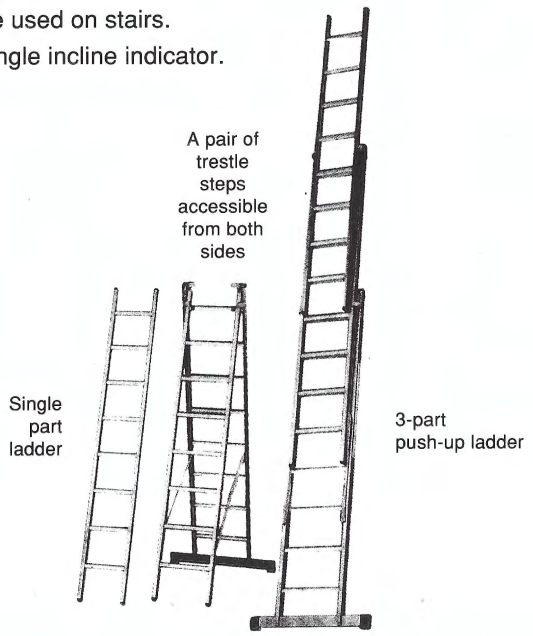



Trestle steps for use on stairs

Model no. 40 228 - 3 x 8 rungs 4m (working heights as extended trestles)

Model no. 40 229 - 3 x 10 rungs 5m

Model no. 40 230 - 3 x 12 rungs* 6m

Model no. 40 231 - 3 x 14 rungs 7m

Model shown in photograph at working height 6m

Health & Safety approved to the following standards

5 YEARS EURO-GUARANTEE

EN 131 1991 outline specification

DIN

SUVA-CONFORM

Z1500

NF E 85-002

HARKNESS HALL LIMITED THE GATE STUDIOS STATION ROAD BOREHAM WOOD HERTS WD6 1DQ TEL: 0181 953 9371 / 3611 FAX: 0181 207 365

Harkness Hall Limited

THE BIGGEST NAME BACKSTAGE

RANGE OF DRAPERIES FOR
CINEMA • THEATRE • HALLS • SCHOOLS • HOSPITALS

WE MANUFACTURE, IN OUR OWN WORKSHOPS, A RANGE OF STAGE CURTAINS, DRAW, FESTOON, CONTOUR, ROLLER CURTAINS AND MASKINGS, FRAME SCREEN MASKING SYSTEMS, SCENIC CLOTHS ETC. USING A VARIETY OF FABRIC TYPES.
SOME OF WHICH ARE...

VELVETS	Durably flame retardant to meet the following specifications: BS 5867:Part 2:1980 types A, B and C BS 3120 DOE/PSA:FRS No. 7 (April 1980) Ignition Source 0, 1 & 5 Non durable to meet specifications: BS 5867:Part 2:1980;Type B
TREVIRA	Inherently flame retardant to BS 5867 Part 2 Type B standard, slub weave, plains or shadow stripe fabrics in a range of shades and weights.
DIM-OUTS	Inherently flame retardant to BS 5867 Part 2 Type B. Available in two weights and a range of plain colours.
SERGE & MELTONS	Durably flame retardant chemically treated to comply with BS 5867 Part 2 Type B, and to withstand a number of cleanings. In a range of colours including Black and Chromakey.
STAGE SCENERY	A variety of stage and scenic fabrics including PVC Screens and Cycs., Scenic canvas, Flax and Cotton, Calicos, Sheeting, Cotton Duck, Hessians, Filled Cloths, Scrims, Muslins, Casements in a range of colours, Black and Grey Twills, Gauzes - reflective, fine, scenic, squares, Sharkstooth, Tiger and Bobbin nets, Voils, Silks and Satins.

PLEASE TELEPHONE US TO DISCUSS YOUR PARTICULAR REQUIREMENT OR TO ARRANGE A SURVEY VISIT
TELEPHONE: 0181 953 9371/3611 FAX: 0181 207 3657

The Gate Studios Station Road Boreham Wood Herts WD6 1DQ England

Ref: 1/7001/0120/C